3/2-5/2-way valve

with NAMUR style interface

PLUS

Art. No. 103654

Type No. 552.12

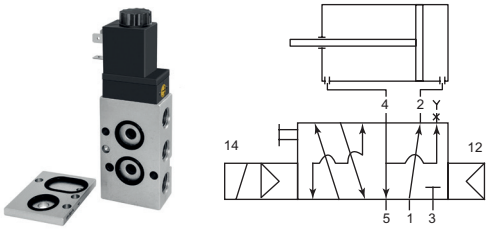

Exemplary illustration

Pilot-operated 3/2- and 5/2-way spool valves with threaded ports and a NAMUR style interface with air purging function. By adding the conversion plate supplied with each valve, the device can be adapted to 3/2-way function.

The following finishes are available on request:
- stainless steel, alternatively Ematal surfaces
- ATEX
- suitable for low temperatures
- suitable for high temperatures

Technical data

Function	3/2-5/2
Version	with air spring
Connection	G 1/4 IT
Voltage	24 V DC
Electrical connection	connector socket PG 9
Scope of delivery	plug connector PG 9, conversion plate, screws and seal
DN	7 mm
Flow rate	1250 l/min
Medium	filtered compressed air with or without lubrication. If lubricated, then continuous.
Required purity class in accordance w. ISO 8573-1	7.4.4
Working pressure	1.5 - 10 bar
Power input	3 W=/ 5 VA~
Operating temperature	-20 to 50 °C
Housing	anodised aluminium
Sealant	NBR
Spool	Stainless steel
Manual override	latching

RIEGLER & Co. KG
Schützenstraße 27
72574 Bad Urach
Tel. +49 7125 9497-642
technik@riegler.de

Subject to technical changes and errors reserved.
The proficiency testing is the responsibility of the user.
09.11.2026 The specified data do not represent legally guaranteed properties.

Commercial data

Customs tariff number	84812090
Country of origin	HU
eCl@ss 5.1.4	27291501
eCl@ss 9.0	27291390
UNSPSC_Code_v190501	40141603
UNSPSC_CodeDesc_v190501	Pneumatic valves

Dimensions [mm]

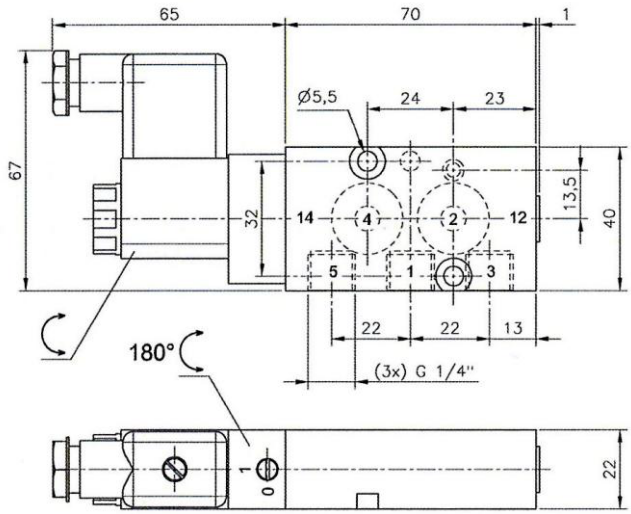

Accessories

	Art. No.	Type No.
Throttle plate for NAMUR valves, Anodised aluminium, Temp. -20 °C to 70 °C, Working pressure 0.5 - 10 bar, 3-way, Knurled screw	103663	551.41
Throttle plate for NAMUR valves, Anodised aluminium, Temp. -20 °C to 70 °C, Working pressure 0.5 - 10 bar, 3-way, Screwdriver	103664	551.42
Throttle plate for NAMUR valves, Anodised aluminium, Temp. -20 °C to 70 °C, Working pressure 0.5 - 10 bar, 5-way, Knurled screw	103665	551.51
Throttle plate for NAMUR valves, Anodised aluminium, Temp. -20 °C to 70 °C, Working pressure 0.5 - 10 bar, 5-way, Screwdriver	103666	551.52

RIEGLER & Co. KG
Schützenstraße 27
72574 Bad Urach
Tel. +49 7125 9497-642
technik@riegler.de

Subject to technical changes and errors reserved.
The proficiency testing is the responsibility of the user.
09.11.2026 The specified data do not represent legally guaranteed properties.