# 2/2-way solenoid valve

**Art. No.** **192063**

**Type No.** **MVA.14.MS.230.N.BV.10**

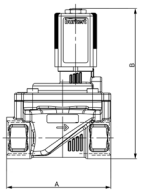

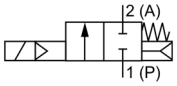


Exemplary illustration

The Type 6281 valve is a servo-assisted diaphragm valve. A minimum differential pressure is always required for the valve to operate. Different diaphragm materials and operating principles are available to suit the respective applications. The standard brass body meets European drinking water requirements. Dezincification-resistant brass is available for other markets. The range of body materials is complemented by a stainless steel version. To reduce electrical power consumption during operation, coils with integrated kick-and-drop electronics using dual-coil technology are available. The valve can also be supplied with a manual override for easy maintenance and commissioning.

## Technical data

| | |
|---|---|
| Thread | G 1/4 IT |
| Operating pressure | 0.2 - 16 bar |
| Voltage | 230 V AC |
| Housing | brass |
| Valve seat | brass |
| Internal parts | stainless steel, PPS |
| Sealant | NBR |
| Medium temperature | -10 to 80 °C |
| Ambient temperature | 0 to 55 °C |
| Protection IP | IP 65 (with connector socket fitted) |
| Electrical connection | pin terminal acc. to DIN EN 175301-803, type A |
| Max. operating pressure | 16 bar |
| Min. medium temperature | -10 °C |
| Max. medium temperature | 80 °C |
| Min. ambient temperature | 0 °C |
| Max. ambient temperature | 55 °C |
| Function | normally closed (NC) |
| DN | 10 mm |
| A | 50.0 mm |
| B | 94.1 mm |

RIEGLER & Co. KG
Schützenstraße 27
72574 Bad Urach
Tel. +49 7125 9497-642
technik@riegler.de



Subject to technical changes and errors reserved.
The proficiency testing is the responsibility of the user.
20.10.2026 The specified data do not represent legally guaranteed properties.

## Commercial data

| | |
|---|---|
| Customs tariff number | 84818079 |
| Country of origin | DE |
| eCl@ss 5.1.4 | 27220601 |
| eCl@ss 9.0 | 27220601 |
| UNSPSC_Code_v190501 | 40141605 |
| UNSPSC_CodeDesc_v190501 | Solenoid valves |

RIEGLER & Co. KG
Schützenstraße 27
72574 Bad Urach
Tel. +49 7125 9497-642
technik@riegler.de



Subject to technical changes and errors reserved.
The proficiency testing is the responsibility of the user.
20.10.2026 The specified data do not represent legally guaranteed properties.

## Servo-assisted 2/2-way diaphragm valve

- Servo-assisted diaphragm valve up to DN 50
- Vibration-resistant, centrally screwed coil system
- Damped design for quiet closing
- Energy-saving double coil technology with kick and drop variant
- Explosion-proof variants

Product variants described in the data sheet may differ from the product presentation and description.

### Can be combined with

**Type 2518**
Cable plug,
form A according to
DIN EN 175301-803

**Type 2509**
Cable plug,
form A according to
DIN EN 175301-803

### Type description

Valve 6281 is a servo-assisted diaphragm valve. A minimum differential pressure is always required for the valve to function. Various diaphragm materials and circuit functions are available depending on the actual application. The standard brass body meets European drinking water requirements. For other markets, dezincification-resistant brass is available. The range includes a variant with a stainless steel body. To reduce electrical power consumption during operation, coils with integrated Kick-and-Drop (KD) electronics featuring double coil technology are available. The valve can be supplied with manual operation for easy maintenance and commissioning.

DTS 1000152082 EN Version: R Status: RL (released | freigegeben | validé) printed: 18.12.2024


© Christian Bürkert GmbH & Co. KG, Subject to alteration

Visit product website

RIEGLER & Co. KG
Schützenstraße 27
72574 Bad Urach
Tel. +49 7125 9497-642
technik@riegler.de



Subject to technical changes and errors reserved.
The proficiency testing is the responsibility of the user.
20.10.2026 The specified data do not represent legally guaranteed properties.

## Table of contents


**1. General technical data** 3

**2. Circuit functions** 4

**3. Approvals and conformities** 4

3.1. General notes 4
3.2. Conformity 4
3.3. Standards 4
3.4. Explosion protection 4
3.5. North America (USA/Canada) 5
3.6. Drinking water 5
3.7. Others 5
DNV GL classification 5
Oxygen 5
VDE – Certificate of conformity with factory surveillance 6

**4. Materials** 6

4.1. Bürkert resistApp 6
4.2. Material specifications 6

**5. Dimensions** 7

5.1. Standard version 7
5.2. ATEX/IECEx cable version 9
5.3. ATEX/IECEx terminal box version 10
5.4. Compressor relief valves 11

**6. Performance specifications** 12

6.1. Power consumption 12
6.2. Power consumption Kick and Drop coil 12

**7. Product accessories** 12

7.1. Cable glands for ATEX/IECEx terminal box 12
7.2. Special tool to turn the terminal box 13

**8. Ordering information** 13

8.1. Bürkert eShop 13
8.2. Bürkert product filter 13
8.3. Bürkert Product Enquiry Form 13
8.4. Ordering chart 14
Standard version with brass body 14
Standard version with stainless steel body 17
ATEX/IECEx cable version 18
ATEX/IECEx terminal box version 19
Compressor relief valve with brass body 20
8.5. Ordering chart accessories 20
Cable plug Type 2518, form A according to DIN EN 175301 - 803 20
Cable plug Type 2509, form A according to DIN EN 175301 - 803 21
Cable glands for ATEX/IECEx terminal box 21
Mounting set for DN 10 21


DTS 1000152082 EN Version: R Status: RL (released | freigegeben | validé) printed: 18.12.2024



RIEGLER & Co. KG
Schützenstraße 27
72574 Bad Urach
Tel. +49 7125 9497-642
technik@riegler.de



Subject to technical changes and errors reserved.
The proficiency testing is the responsibility of the user.
20.10.2026 The specified data do not represent legally guaranteed properties.

## 1. General technical data

| | |
|---|---|
| **Product properties** | |
| Dimensions | Further information can be found in chapter "5. Dimensions" on page 7. |
| **Material** | |
| Seal | NBR, EPDM, FKM |
| Body | Brass acc. to DIN EN 50930 - 6, stainless steel<br>(dezincification resistant on request) |
| Inner valve parts | Stainless steel, brass, plastic (PPS) |
| Orifice | DN 10...DN 50 |
| Circuit function | Further information can be found in chapter "2. Circuit functions" on page 4. |
| Thermal insulation class of solenoid coil | Polyamide coil class B<br>Epoxy coil class H |
| **Performance data** | |
| Duty cycle | 100 % continuous operation |
| Switching time [1.)] | Opening: 0.1...1.5 s<br>Closing: 0.2...4 s |
| **Electrical data** | |
| Operating voltage | 24 V/DC, 24 V/UC, 24 V/50...60 Hz, 230 V/UC, 230 V/50...60 Hz |
| Power consumption | Further information can be found in chapter "6. Performance specifications" on page 12. |
| Voltage tolerance | ± 10 % |
| **Medium data** | |
| Operating medium | Medium that does not attack the housing and sealing materials<br>Further information can be found in chapter "4.1. Bürkert resistApp" on page 6. |
| **Medium temperature** | |
| NBR | - 10 °C...+ 80 °C |
| EPDM | - 30 °C...+ 90 °C (with epoxy coil to + 100 °C)<br>0 °C...+ 60 °C (with drinking water approval according to UBA (PF36)) |
| FKM | 0 °C...+ 90 °C (with epoxy coil to + 120 °C) |
| **Process/Port connection & communication** | |
| Electrical connection | • Cable plug **Type 2518** ▶, form A according to DIN EN 175301 - 803<br>Further information can be found in chapter "Cable plug Type 2518, form A according to DIN EN 175301 - 803" on page 20.<br>• Cable plug **Type 2509** ▶, form A according to DIN EN 175301 - 803<br>Further information can be found in chapter "Cable plug Type 2509, form A according to DIN EN 175301 - 803" on page 21. |
| **Approvals and conformities** | |
| Directives | CE, EAC |
| Degree of protection | IP65 with cable plug, cable connection and terminal box |
| Explosion protection | Further information can be found in chapter "3.4. Explosion protection" on page 4. |
| North America (USA/Canada) | Further information can be found in chapter "3.5. North America (USA/Canada)" on page 5. |
| Drinking water | Further information can be found in chapter "3.6. Drinking water" on page 5. |
| Others | Further information can be found in chapter "3.7. Others" on page 5. |
| **Environment and installation** | |
| Installation | As required, preferably with actuator upright |
| **Ambient temperature** | |
| Standard version | Max. + 55 °C |
| Version with kick and drop coil | Max. + 70 °C (max. 30 switching operations/min)<br>Max. + 85 °C (max. 1 switching operation/min)<br>Max. + 55 °C (for versions with UR/UL approval) |

1.) Measurement at + 20 °C, 6 bar at the valve inlet and free outlet, opening: pressure reduction to 90 % of the difference to the flow pressure, closing: pressure build-up to 90 % of the inlet pressure

DTS 1000152082 EN Version: R Status: RL (released | freigegeben | validé) printed: 18.12.2024



RIEGLER & Co. KG
Schützenstraße 27
72574 Bad Urach
Tel. +49 7125 9497-642
technik@riegler.de



Subject to technical changes and errors reserved.
The proficiency testing is the responsibility of the user.
20.10.2026 The specified data do not represent legally guaranteed properties.

## 2. Circuit functions

| Symbol | Description |
|---|---|
| 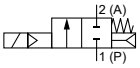 | **Circuit function A (CF A)**<br>2/2-way solenoid valve<br>Servo-controlled<br>Normally closed |
| 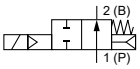 | **Circuit function B (CF B)**<br>2/2-way solenoid valve<br>Servo-controlled<br>Normally open |

## 3. Approvals and conformities

### 3.1. General notes

- The approvals and conformities listed below must be stated when making enquiries. This is the only way to ensure that the product complies with all required specifications.
- Not all available versions can be supplied with the below mentioned approvals or conformities.

### 3.2. Conformity

In accordance with the Declaration of Conformity, the product is compliant with the EU Directives.

### 3.3. Standards

The applied standards which are used to demonstrate compliance with the EU Directives are listed in the EU-Type Examination Certificate and/or the EU Declaration of Conformity.

### 3.4. Explosion protection

| Approval | Description |
|---|---|
| | **Optional: Explosion protection**<br><br>**ATEX:**<br>EPS 18 ATEX 1232 X<br>II 2G Ex mb IIC T4 Gb<br>II 2D Ex mb IIIC T130 °C Db<br>II 2G Ex eb mb IIC T4 Gb<br>II 2D Ex mb tb IIIC T130 °C Db<br><br>**IECEx:**<br>IECEx EPS 18.0110 X<br>Ex mb IIC T4 Gb<br>Ex mb IIIC T130 °C Db<br>Ex eb mb IIC T4 Gb<br>Ex mb tb IIIC T130 °C Db |

DTS 1000152082 EN Version: R Status: RL (released | freigegeben | validé) printed: 18.12.2024



RIEGLER & Co. KG
Schützenstraße 27
72574 Bad Urach
Tel. +49 7125 9497-642
technik@riegler.de



Subject to technical changes and errors reserved.
The proficiency testing is the responsibility of the user.
20.10.2026 The specified data do not represent legally guaranteed properties.

### 3.5. North America (USA/Canada)

| Approval | Description |
|---|---|
| LISTED | **Valid for valves: UL Listed for the USA**<br>The valves are UL Listed for the USA according to:<br>• UL 429 (electrically operated valves) and UL 429A (Electrically Operated Valves for Fire Protection Service) |
| c UL us LISTED SOLENOID FOR USE IN HAZARDOUS LOCATIONS E504714 | **Valid for coils: UL Hazardous Locations – Explosion Protection**<br>UL Listed for Hazardous Locations for USA and Canada<br>Class I, Zone 1<br>Class I, Division 2, Group A, B, C and D<br>Class II + III, Division 2, Group F and G |
| | **Valid for valves: UL Recognized for the USA**<br>The valves are UL Recognized for the USA according to:<br>• UL 429 (electrically operated valves) and UL 429A (Electrically Operated Valves for Fire Protection Service) |
| c us | **Valid for coils: UL Recognized for the USA and Canada**<br>The coils are UL Recognized for the USA and Canada according to:<br>• UL 429 (electrically operated valves)<br>• CAN/CSA-C22.2 No. 61010-1 |
| | **Valid for valves: CSA for Canada**<br>The valves are CSA approved for Canada according to:<br>• CSA 139 (electrically operated valves) |

### 3.6. Drinking water

| Conformity | Description |
|---|---|
| $H_2O$ | **Suitable for use in drinking water applications**<br>The materials comply with the assessment principles (UBA) for materials in contact with drinking water (Trinkwasserv).<br><br>PF39: Suitable for products with a maximum temperature of 85 °C (hot water)<br>PF36: Suitable for products with a maximum temperature of 60 °C (warm water) |

### 3.7. Others

**DNV GL classification**

| Approval | Description |
|---|---|
| TYPE APPROVED PRODUCT DNV DNV.COM/AF | **DNV GL classification – Ships, offshore units, and high speed and light craft**<br>The products are accepted for installation on all vessels classed by DNV GL. |

**Oxygen**

| Conformity | Description |
|---|---|
| $O_2$ | **Optional: Suitability for oxygen (valid for the variable code NL02)**<br>The products are suitable for use with gaseous oxygen, according to the manufacturer's declaration. |

DTS 1000152082 EN Version: R Status: RL (released | freigegeben | validé) printed: 18.12.2024



RIEGLER & Co. KG
Schützenstraße 27
72574 Bad Urach
Tel. +49 7125 9497-642
technik@riegler.de



Subject to technical changes and errors reserved.
The proficiency testing is the responsibility of the user.
20.10.2026 The specified data do not represent legally guaranteed properties.

**VDE – Certificate of conformity with factory surveillance**

| Approval | Description |
|---|---|
| | **Optional: Certificate of conformity with factory surveillance (VDE Testing and Certification Institute) (valid for the variable code PW01 and PW02)**<br>The electrically operated water valves are tested and certified according to:<br>• DIN EN 60730-1 (VDE 0631-1)<br>• EN 60730-1<br>• DIN EN IEC 60730-2-8 (VDE 0631-2-8)<br><br>The electrically operated water valves also fulfill the requirements of:<br>• IEC 60730-1<br>• IEC 60730-2-8 |

# 4. Materials

## 4.1. Bürkert resistApp

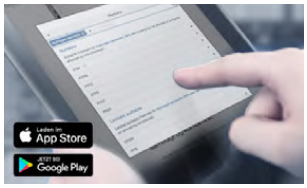


**Bürkert resistApp – Chemical resistance chart**

You want to ensure the reliability and durability of the materials in your individual application case? Verify your combination of media and materials on our website or in our resistApp.

Start chemical resistance check

## 4.2. Material specifications

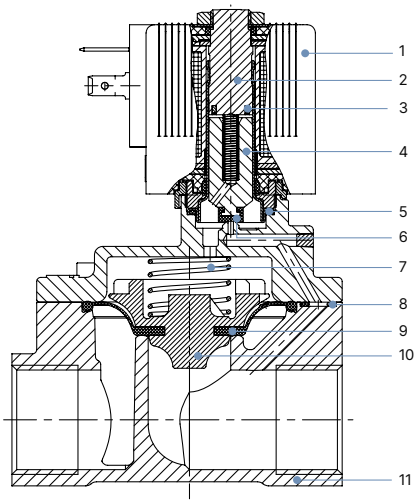


| No. | Element | Material |
|---|---|---|
| 1 | Coil | Polyamide [1.)] or Epoxy [2.)] |
| 2 | Stopper | Stainless steel 1.4113 |
| 3 | Shading ring | Cu (brass version)<br>Ag (stainless steel version) |
| 4 | Magnetic core | Stainless steel 1.4113 |
| 5 | O-rings | NBR, FKM, EPDM |
| 6 | Core seal | NBR, FKM, EPDM |
| 7 | Spring | Stainless steel 1.4310 |
| 8 | O-rings | NBR, FKM, EPDM |
| 9 | Diaphragm | NBR, FKM, EPDM |
| 10 | Diaphragm holder | PPSGF40, DN 50: Brass and stainless steel |
| 11 | Valve body | Brass acc. to DIN EN 50930 - 6 or stainless steel 1.4408 (CF8M) |

1.) With NBR/EPDM seal
2.) With FKM seal

DTS 1000152082 EN Version: R Status: RL (released | freigegeben | validé) printed: 18.12.2024



RIEGLER & Co. KG
Schützenstraße 27
72574 Bad Urach
Tel. +49 7125 9497-642
technik@riegler.de



Subject to technical changes and errors reserved.
The proficiency testing is the responsibility of the user.
20.10.2026 The specified data do not represent legally guaranteed properties.

## 5. Dimensions

### 5.1. Standard version

**Note:**

- Dimensions in mm
- The dimensions F1 and G1 apply to G-thread.
- The dimensions F2 and G2 apply to NPT-thread.
- The dimensions F3 and G3 apply to Rc-thread.

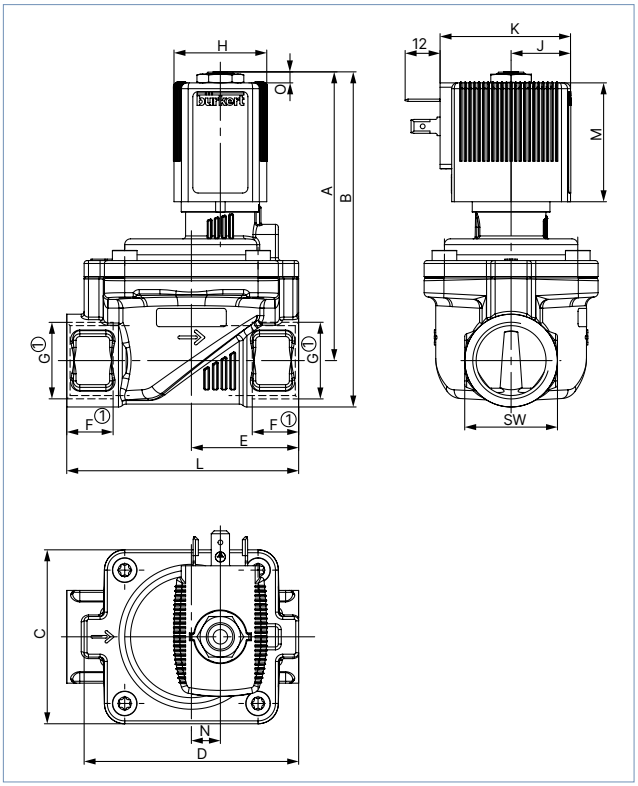


| Coil size | H | J | K | M | O |
|---|---|---|---|---|---|
| 5 | 32 | 20.5 | 45 | 41 | 3.4 |
| 6 | 40 | 23.5 | 51 | 41.4 | 3.8 |

| DN | A | B | C | D | E | G | | NPT | | Rc | | L | SW | N |
|---|---|---|---|---|---|---|---|---|---|---|---|---|---|---|
| | | | | | | F1 | G1 | F2 | G2 | F3 | G3 | | | |
| 10 1) | 83.1 | 94.1 | 32 | 44 | 22 | 12 | G ¼ | 10 | NPT ¼ | – | – | 50 | 22 | – |
| | | | | | | 12 | G ⅜ | 10.3 | NPT ⅜ | 10.1 | Rc ⅜ | | | |
| | 85.1 | 98.6 | | | 24.5 | 14 | G ½ | 13.7 | NPT ½ | – | – | 50 | 27 | – |
| 10 2) | 83.6 | 94.6 | | | 22 | 12 | G ¼ | 10 | NPT ¼ | – | – | 50 | 22 | – |
| | | | | | | 12 | G ⅜ | 10.3 | NPT ⅜ | 10.1 | Rc ⅜ | | | |
| | 85.6 | 99.1 | | | 24.5 | 14 | G ½ | 13.7 | NPT ½ | – | – | 55 | 27 | – |
| 13 1) | 91.1 | 104.6 | 42 | 54.5 | 27.25 | 12 | G ⅜ | – | – | – | – | 58 | 27 | – |
| 13 | | | | | 32.5 | 14 | G ½ | 13.7 | NPT ½ | 13.2 | Rc ½ | 65 | 27 | |
| | 93.1 | 109.1 | | | | 16 | G ¾ | 14 | NPT ¾ | – | – | 65 | 32 | |
| 20 | 99.6 | 115.6 | 60 | 74 | 37 | 16 | G ¾ | 14 | NPT ¾ | 14.5 | Rc ¾ | 80 | 32 | 10 |
| | 102.1 | 122.6 | | | 37.5 | 18 | G 1 | 16.8 | NPT 1 | – | – | 80 | 41 | |
| 25 | 106.6 | 127.1 | 70 | 85 | 46 | 18 | G 1 | 16.8 | NPT 1 | 16.8 | Rc 1 | 95 | 41 | 15 |
| | 111.6 | 136.6 | | | | 20 | G 1¼ | 17.3 | NPT 1¼ | 19.1 | Rc 1¼ | 95 | 50 | |



DTS 1000152082 EN Version: R Status: RL (released | freigegeben | validé) printed: 18.12.2024

RIEGLER & Co. KG
Schützenstraße 27
72574 Bad Urach
Tel. +49 7125 9497-642
technik@riegler.de



Subject to technical changes and errors reserved.
The proficiency testing is the responsibility of the user.
20.10.2026 The specified data do not represent legally guaranteed properties.

**Type 6281**

bürkert
FLUID CONTROL SYSTEMS

| DN | A | B | C | D | E | G | | NPT | | Rc | | L | SW | N |
|---|---|---|---|---|---|---|---|---|---|---|---|---|---|---|
| | | | | | | F1 | G1 | F2 | G2 | F3 | G3 | | | |
| 40 1.) | 120.1 | 145.1 | 99 | 114 | 61 | 20 | G 1¼ | 17.3 | NPT 1¼ | 19.1 | Rc 1¼ | 126 | 50 | 23 |
| 40 | 125.6 | 155.6 | | | | 22 | G 1½ | | NPT 1½ | | Rc 1½ | 126 | 60 | |
| | 131.6 | 166.6 | | | 64 | 24 | G 2 | 17.6 | NPT 2 | 23.4 | Rc 2 | 132 | 70 | |
| 50 1.) | 119.9 | 154.9 | 115 | 132 | 82 | 24 | G 2 | 17.6 | NPT 2 | 23.4 | Rc 2 | 164 | 70 | 37 |
| | 119.6 | 162.1 | | | 89.5 | 27 | G 2½ | 23.6 | NPT 2½ | – | – | 179 | 85 | |

1.) Only threaded brass connection
2.) Only threaded stainless steel connection

DTS 1000152082 EN Version: R Status: RL (released | freigegeben | validé) printed: 18.12.2024



RIEGLER & Co. KG
Schützenstraße 27
72574 Bad Urach
Tel. +49 7125 9497-642
technik@riegler.de



Subject to technical changes and errors reserved.
The proficiency testing is the responsibility of the user.
20.10.2026 The specified data do not represent legally guaranteed properties.

DTS 1000152082 EN Version: R Status: RL (released | freigegeben | validé) printed: 18.12.2024

### 5.2. ATEX/IECEx cable version

**Note:**

- Dimensions in mm
- The dimensions F1 and G1 apply to G-thread.
- The dimensions F2 and G2 apply to NPT-thread.
- The dimensions F3 and G3 apply to Rc-thread.
- For DN 50 see dimensions "5.3. ATEX/IECEx terminal box version" on page 10

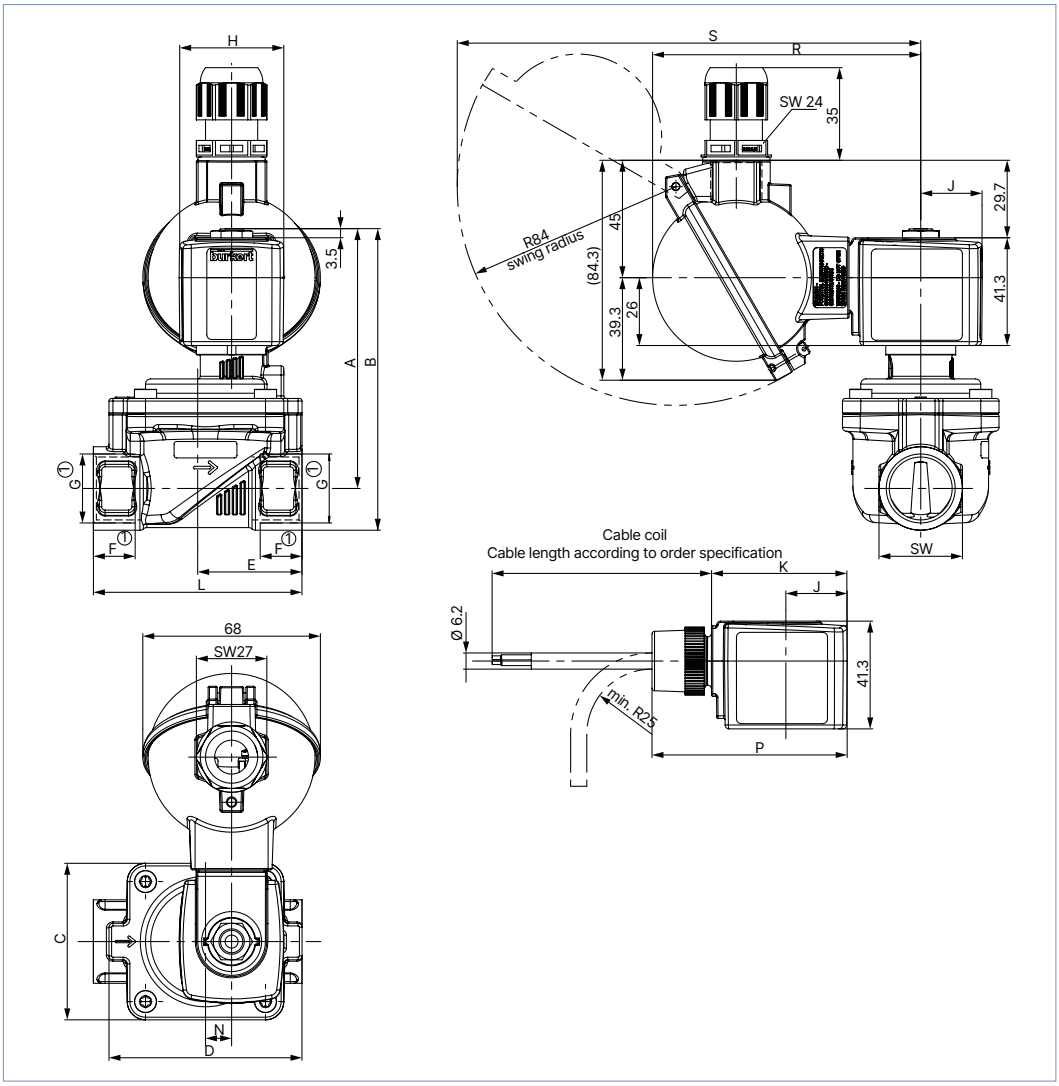


| Coil size | H | J | K | P | R | S |
|---|---|---|---|---|---|---|
| 5 | 32 | 20.5 | 46 | 68.8 | 99.8 | 174.7 |
| 6 | 40 | 23.5 | 52 | 74.8 | 103 | 177.7 |



RIEGLER & Co. KG
Schützenstraße 27
72574 Bad Urach
Tel. +49 7125 9497-642
technik@riegler.de



Subject to technical changes and errors reserved.
The proficiency testing is the responsibility of the user.
20.10.2026 The specified data do not represent legally guaranteed properties.

| DN | A | B | C | D | E | G | | NPT | | Rc | | L | SW | N |
|---|---|---|---|---|---|---|---|---|---|---|---|---|---|---|
| | | | | | | F1 | G1 | F2 | G2 | F3 | G3 | | | |
| 10 1.) | 83.1 | 94.1 | 32 | 44 | 22 | 12 | G ¼ | 10 | NPT ¼ | – | – | 50 | 22 | – |
| | | | | | | 12 | G ⅜ | 10.3 | NPT ⅜ | 10.1 | Rc ⅜ | | | |
| | 85.1 | 98.6 | | | 24.5 | 14 | G ½ | 13.7 | NPT ½ | – | – | 50 | 27 | – |
| 10 2.) | 83.6 | 94.6 | | | 22 | 12 | G ¼ | 10 | NPT ¼ | – | – | 50 | 22 | – |
| | | | | | | 12 | G ⅜ | 10.3 | NPT ⅜ | 10.1 | Rc ⅜ | | | |
| | 85.6 | 99.1 | | | 24.5 | 14 | G ½ | 13.7 | NPT ½ | – | – | 55 | 27 | – |
| 13 1.) | 91.1 | 104.6 | 42 | 54.5 | 27.25 | 12 | G ⅜ | – | – | – | – | 58 | 27 | – |
| 13 | | | | | 32.5 | 14 | G ½ | 13.7 | NPT ½ | 13.2 | Rc ½ | 65 | 27 | |
| | 93.1 | 109.1 | | | | 16 | G ¾ | 14 | NPT ¾ | – | – | 65 | 32 | |
| 20 | 99.6 | 115.6 | 60 | 74 | 37 | 16 | G ¾ | 14 | NPT ¾ | 14.5 | Rc ¾ | 80 | 32 | 10 |
| | 102.1 | 122.6 | | | 37.5 | 18 | G 1 | 16.8 | NPT 1 | – | – | 80 | 41 | |
| 25 | 106.6 | 127.1 | 70 | 85 | 46 | 18 | G 1 | 16.8 | NPT 1 | 16.8 | Rc 1 | 95 | 41 | 15 |
| | 111.6 | 136.6 | | | | 20 | G 1¼ | 17.3 | NPT 1¼ | 19.1 | Rc 1¼ | 95 | 50 | |
| 40 1.) | 120.1 | 145.1 | 99 | 114 | 61 | 20 | G 1¼ | 17.3 | NPT 1¼ | 19.1 | Rc 1¼ | 126 | 50 | 23 |
| 40 | 125.6 | 155.6 | | | | 22 | G 1½ | | NPT 1½ | | Rc 1½ | 126 | 60 | |
| | 131.6 | 166.6 | | | 64 | 24 | G 2 | 17.6 | NPT 2 | 23.4 | Rc 2 | 132 | 70 | |
| 50 1.) | 119.9 | 154.9 | 115 | 132 | 82 | 24 | G 2 | 17.6 | NPT 2 | 23.4 | Rc 2 | 164 | 70 | 37 |
| | 119.6 | 162.1 | | | 89.5 | 27 | G 2½ | 23.6 | NPT 2½ | – | – | 179 | 85 | |

1.) Only threaded brass connection
2.) Only threaded stainless steel connection

## 5.3. ATEX/IECEx terminal box version

**Note:**

- Dimensions in mm
- Standard at DN 50

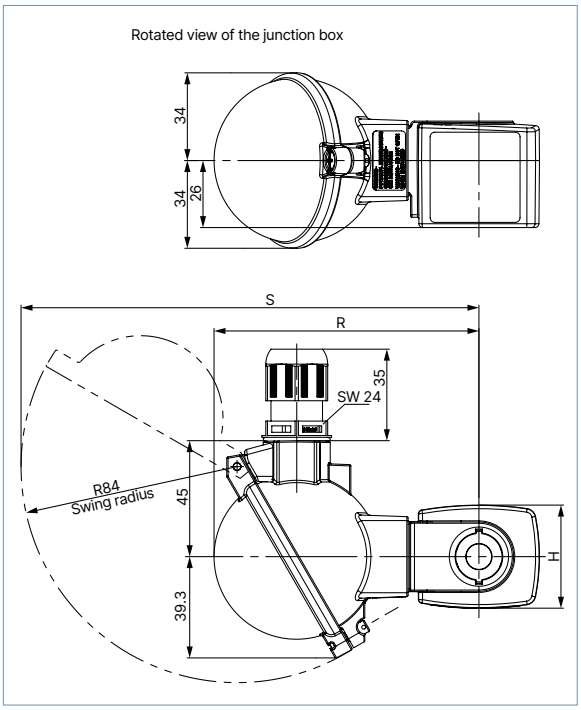


| Coil size | H | J | K | P | R | S |
|---|---|---|---|---|---|---|
| 5 | 32 | 20.5 | 46 | 68.8 | 99.8 | 174.7 |
| 6 | 40 | 23.5 | 52 | 74.8 | 103 | 177.7 |



DTS 1000152082 EN Version: R Status: RL (released | freigegeben | validé) printed: 18.12.2024

RIEGLER & Co. KG
Schützenstraße 27
72574 Bad Urach
Tel. +49 7125 9497-642
technik@riegler.de



Subject to technical changes and errors reserved.
The proficiency testing is the responsibility of the user.
20.10.2026 The specified data do not represent legally guaranteed properties.

## 5.4. Compressor relief valves

**Note:**

- Dimensions in mm
- The dimensions F1 and G1 apply to G-thread.
- The dimensions F2 and G2 apply to NPT-thread.
- The dimensions F3 and G3 apply to Rc-thread.

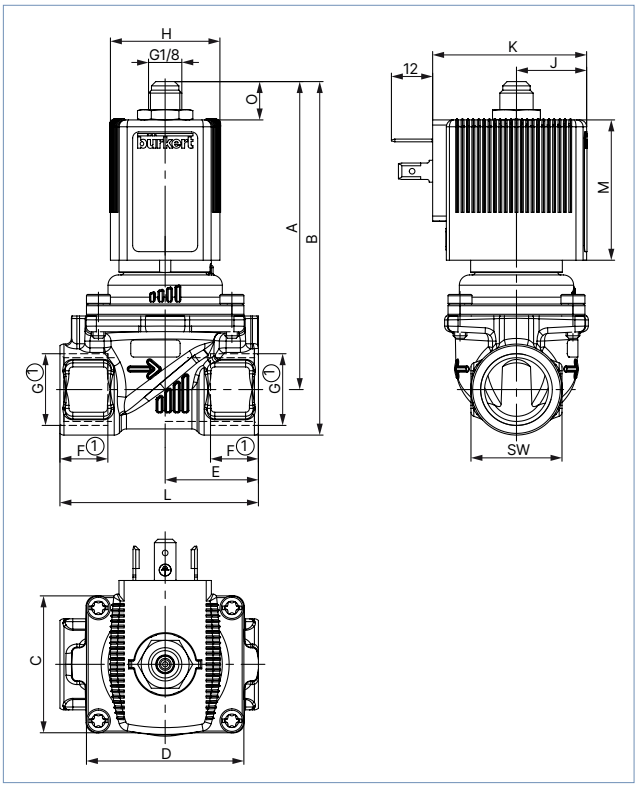


| Coil size | H | J | K | M | O |
|---|---|---|---|---|---|
| 5 | 32 | 20.5 | 46 | 41 | 11.2 |
| 6 | 40 | 23.5 | 52 | 41.4 | 10.8 |

| DN | A | B | C | D | E | G | | NPT | | Rc | | L | SW |
|---|---|---|---|---|---|---|---|---|---|---|---|---|---|
| | | | | | | F1 | G1 | F2 | G2 | F3 | G3 | | |
| 10 | 90.5 | 101.5 | 32 | 44 | 22 | 12 | G ¼ | 10 | NPT ¼ | – | – | 50 | 22 |
| | | | | | | 12 | G ⅜ | 10.3 | NPT ⅜ | 10.1 | Rc ⅜ | | |
| | 92.5 | 106 | | | 24.5 | 14 | G ½ | 13.7 | NPT ½ | 13.2 | Rc ½ | | 27 |
| 13 | 90 | 103.5 | 42 | 54.5 | 27.25 | 12 | G ⅜ | – | – | – | – | 58 | 27 |
| | | | | | | 14 | G ½ | 13.7 | NPT ½ | 13.2 | Rc ½ | | |
| | 92 | 108 | | | 32.5 | 16 | G ¾ | 14 | NPT ¾ | 14.5 | Rc ¾ | 65 | 32 |
| 20 | 107 | 123 | 60 | 74 | 37 | 16 | G ¾ | 14 | NPT ¾ | 14.5 | Rc ¾ | 80 | 32 |
| | 109.5 | 130 | | | 37.5 | 18 | G 1 | 16.8 | NPT 1 | – | – | | 41 |

DTS 1000152082 EN Version: R Status: RL (released | freigegeben | validé) printed: 18.12.2024



RIEGLER & Co. KG
Schützenstraße 27
72574 Bad Urach
Tel. +49 7125 9497-642
technik@riegler.de



Subject to technical changes and errors reserved.
The proficiency testing is the responsibility of the user.
20.10.2026 The specified data do not represent legally guaranteed properties.

## 6. Performance specifications

### 6.1. Power consumption

| Circuit function | Orifice | Coil size | AC | | | DC | | ATEX AC/DC |
|---|---|---|---|---|---|---|---|---|
| | | | Inrush power | Holding power | | Cold | Hot | Nominal power |
| | [mm] | [mm] | [VA] | [VA] | [W] | [W] | [W] | [W] |
| A | 10...50 | 32 | 24 | 14 | 8 | 9.5 | 8 | – |
| A | 10...50 | 32 | 24 | 16 | 7 | 9.5 | 8 | – |
| A / B | 13...50 | 40 | – | – | – | – | – | 9 |
| A | 10 | 32 | – | – | – | – | – | 7 |
| B | 10 | 40 | – | – | – | – | – | 9 |
| B u. CF05 | 10 | 32 | 18 | 11 | 5 | 6 | 5 | – |
| B u. MX62 | 13 | 32 | 24 | 14 | 8 | – | – | – |
| B u. MX62 | 13 | 40 | – | – | – | 11 | 9.5 | – |

### 6.2. Power consumption Kick and Drop coil

| Circuit function | Orifice | Coil size | Voltage | Inrush power (approx. 500 ms) | | Holding power |
|---|---|---|---|---|---|---|
| | [mm] | [mm] | [V] | [VA] | [W] | [W] |
| A | 10...50 | 40 | 024/UC | – | 12 | 0.6 |
| A | 10...50 | 40 | 230/56 | 20 | – | 2 |
| B | 10...50 | 40 | 024/UC | – | 20 | 2 |
| B | 10...50 | 40 | 230/56 | 20 | – | 2 |

## 7. Product accessories

### 7.1. Cable glands for ATEX/IECEx terminal box

**Note:**
A polyamide cable gland is included in the scope of delivery. A nickel-plated brass version can be ordered for a surcharge, see "Cable glands for ATEX/IECEx terminal box" on page 21.

| Description | Ex approvals | | Dimensions | |
|---|---|---|---|---|
| | Certification | Identification | | |
| Ex cable gland,<br>Nickel-plated brass, 6...13 mm<br> | PTB 04 ATEX 1112 X,<br>IECEx PTB 13.0027X | II 2 G Ex e IIC Gb,<br>II 2 D Ex tb IIIC Db IP68 | 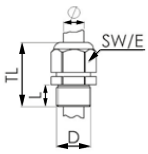 | TL 29...37 mm<br>L 6 mm<br>D 20 mm<br>SW 24 mm<br>E 27 mm |
| Ex cable gland,<br>Polyamide, 7...13 mm<br> | PTB 13 ATEX 1015 X,<br>IECEx PTB 13.0034X | II 2 G Ex e IIC Gb,<br>II 2 D Ex tb IIIC Db IP68 | 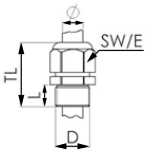 | TL 36...45 mm<br>L 10 mm<br>D 20 mm<br>SW 24 mm<br>E 28 mm |



RIEGLER & Co. KG
Schützenstraße 27
72574 Bad Urach
Tel. +49 7125 9497-642
technik@riegler.de



Subject to technical changes and errors reserved.
The proficiency testing is the responsibility of the user.
20.10.2026 The specified data do not represent legally guaranteed properties.

DTS 1000152082 EN Version: R Status: RL (released | freigegeben | validé) printed: 18.12.2024

### 7.2. Special tool to turn the terminal box

**Note:**
This special tool is not included in the scope of delivery of the valve, see "Cable glands for ATEX/IECEx terminal box" on page 21.

| Description | Components of the set |
|---|---|
| Set SC02-AC10<br> <br> | • Special wrench<br>• Service manual |

## 8. Ordering information

### 8.1. Bürkert eShop

**Bürkert eShop – Easy ordering and quick delivery**

You want to find your desired Bürkert product or spare part quickly and order directly? Our online shop is available for you 24/7. Sign up and enjoy all the benefits.

Order online now

### 8.2. Bürkert product filter

**Bürkert product filter – Get quickly to the right product**

You want to select products comfortably based on your technical requirements?
Use the Bürkert product filter and find suitable articles for your application quickly and easily.

Try out our product filter

### 8.3. Bürkert Product Enquiry Form

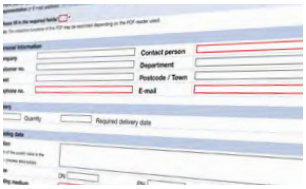

**Bürkert Product Enquiry Form – Your enquiry quickly and compactly**

Would you like to make a specific product enquiry based on your technical requirements? Use our Product Enquiry Form for this purpose. There you will find all the relevant information for your Bürkert contact. This will enable us to provide you with the best possible advice.

Fill out the form now



RIEGLER & Co. KG
Schützenstraße 27
72574 Bad Urach
Tel. +49 7125 9497-642
technik@riegler.de



Subject to technical changes and errors reserved.
The proficiency testing is the responsibility of the user.
20.10.2026 The specified data do not represent legally guaranteed properties.

DTS 1000152082 EN Version: R Status: RL (released | freigegeben | validé) printed: 18.12.2024

## 8.4. Ordering chart

**Standard version with brass body**

**Circuit function A**

**Note:**
Please note that the cable plug must be ordered separately, see "8.5. Ordering chart accessories" on page 20 or separate data sheet for **Type 2518** ▶.

| Circuit function | Port connection | Orifice | $K_v$ value water[1) 2)] | Pressure range[3)] | Weight | Article no. | | |
|---|---|---|---|---|---|---|---|---|
| | | | | | | 024/DC | 024/50...60 | 230/50...60 |
| | | [mm] | [m³/h] | [bar] | [kg] | [V/Hz] | [V/Hz] | [V/Hz] |
| **Seal material NBR, polyamide coil, medium temperature - 10 °C...+ 80 °C** | | | | | | | | |
| **CF A**<br>2/2-way solenoid valve<br>Servo-controlled<br>Normally closed<br> 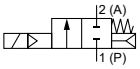 | G ¼ | 10 | 1.5 | 0.2...16 | 0.43 | 322499 | 322500 | 322501 |
| | G ⅜ | 10 | 1.9 | 0.2...16 | 0.40 | 322502 | 322503 | 322504 |
| | G ⅜ | 13 | 3.8 | 0.2...16 | 0.58 | 221841 | 221842 | 221843 |
| | G ½ | 13 | 3.8 | 0.2...16 | 0.54 | 221844 | 221845 | 221846 |
| | G ¾ | 13 | 3.8 | 0.2...16 | 0.59 | 221847 | 221848 | 221849 |
| | G ¾ | 20 | 8.5 | 0.2...16 | 0.89 | 221850 | 221851 | 221852 |
| | G 1 | 20 | 8.5 | 0.2...16 | 1.0 | 221853 | 221854 | 221855 |
| | G 1 | 25 | 12 | 0.2...16 | 1.3 | 221856 | 221857 | 221858 |
| | G 1¼ | 25 | 12 | 0.2...16 | 1.5 | 221859 | 221860 | 221861 |
| | G 1¼ | 40 | 23 | 0.2...16 | 2.7 | 270131 | 268550 | 270132 |
| | G 1½ | 40 | 30 | 0.2...16 | 3.0 | 221862 | 221863 | 221864 |
| | G 2 | 40 | 30 | 0.2...16 | 3.2 | 221865 | 221866 | 221867 |
| | G 2 | 50 | 40 | 0.2...16 | 4.5 | 253156 | 253157 | 253158 |
| | G 2½ | 50 | 40 | 0.2...16 | 5.2 | 253159 | 253160 | 253161 |
| **Seal material NBR, polyamide coil, medium temperature - 10 °C...+ 80 °C, with manual override** | | | | | | | | |
| **CF A**<br>2/2-way solenoid valve<br>Servo-controlled<br>Normally closed<br> 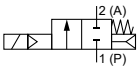 | G ¼ | 10 | 1.5 | 0.2...16 | 0.43 | 322505 | 322506 | 322507 |
| | G ⅜ | 10 | 1.9 | 0.2...16 | 0.40 | 322508 | 322509 | 322510 |
| | G ½ | 13 | 3.8 | 0.2...16 | 0.54 | 221952 | o. r. | 221953 |
| | G ¾ | 13 | 3.8 | 0.2...16 | 0.59 | 221954 | o. r. | 221955 |
| | G ¾ | 20 | 8.5 | 0.2...16 | 0.89 | 221956 | o. r. | 221957 |
| | G 1 | 20 | 8.5 | 0.2...16 | 1.0 | 221958 | o. r. | 221959 |
| | G 1 | 25 | 12 | 0.2...16 | 1.3 | 221960 | o. r. | 221961 |
| | G 1¼ | 25 | 12 | 0.2...16 | 1.5 | 221962 | o. r. | 221963 |
| | G 1¼ | 40 | 23 | 0.2...16 | 2.7 | 270142 | o. r. | 270143 |
| | G 1½ | 40 | 30 | 0.2...16 | 3.0 | 221964 | o. r. | 221965 |
| | G 2 | 40 | 30 | 0.2...16 | 3.2 | 221966 | o. r. | 221967 |
| **Seal material FKM, epoxy coil, medium temperature 0 °C...+ 120 °C** | | | | | | | | |
| **CF A**<br>2/2-way solenoid valve<br>Servo-controlled<br>Normally closed<br> 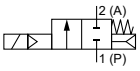 | G ¼ | 10 | 1.5 | 0.2...16 | 0.43 | 322511 | 322512 | 322513 |
| | G ⅜ | 10 | 1.9 | 0.2...16 | 0.40 | 322514 | 322515 | 322516 |
| | G ⅜ | 13 | 3.8 | 0.2...16 | 0.58 | 221868 | 221869 | 221870 |
| | G ½ | 13 | 3.8 | 0.2...16 | 0.54 | 221871 | 221872 | 221873 |
| | G ¾ | 13 | 3.8 | 0.2...16 | 0.59 | 221874 | 221875 | 221876 |
| | G ¾ | 20 | 8.5 | 0.2...16 | 0.89 | 221877 | 221878 | 221879 |
| | G 1 | 20 | 8.5 | 0.2...16 | 1.0 | 221880 | 221881 | 221882 |
| | G 1 | 25 | 12 | 0.2...16 | 1.3 | 221883 | 221884 | 221885 |
| | G 1¼ | 25 | 12 | 0.2...16 | 1.5 | 221886 | 221887 | 221888 |
| | G 1¼ | 40 | 23 | 0.2...16 | 2.7 | 270133 | 270134 | 270135 |
| | G 1½ | 40 | 30 | 0.2...16 | 3.0 | 221889 | 221890 | 221891 |
| | G 2 | 40 | 30 | 0.2...16 | 3.2 | 221892 | 221893 | 221894 |
| | G 2 | 50 | 40 | 0.2...16 | 4.5 | 253168 | 253169 | 253170 |
| | G 2½ | 50 | 40 | 0.2...16 | 5.2 | 253171 | 253172 | 253173 |

DTS 1000152082 EN Version: R Status: RL (released | freigegeben | validé) printed: 18.12.2024



RIEGLER & Co. KG
Schützenstraße 27
72574 Bad Urach
Tel. +49 7125 9497-642
technik@riegler.de



Subject to technical changes and errors reserved.
The proficiency testing is the responsibility of the user.
20.10.2026 The specified data do not represent legally guaranteed properties.

| Circuit function | Port connection | Orifice | $K_v$ value water[1) 2)] | Pressure range[3)] | Weight | Article no. | | |
|---|---|---|---|---|---|---|---|---|
| | | | | | | 024/DC | 024/50...60 | 230/50...60 |
| | | [mm] | [m³/h] | [bar] | [kg] | [V/Hz] | [V/Hz] | [V/Hz] |
| **Seal material EPDM, polyamide coil, medium temperature - 30 °C...+ 90 °C** | | | | | | | | |
| **CF A**<br>2/2-way solenoid valve<br>Servo-controlled<br>Normally closed<br> 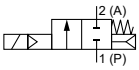 | G ¼ | 10 | 1.5 | 0.2...16 | 0.43 | 322517 | 322518 | 322519 |
| | G ⅜ | 10 | 1.9 | 0.2...16 | 0.40 | 322520 | 322521 | 322522 |
| | G ⅜ | 13 | 3.8 | 0.2...16 | 0.58 | 221895 | 221896 | 221897 |
| | G ½ | 13 | 3.8 | 0.2...16 | 0.54 | 221898 | 221899 | 221900 |
| | G ¾ | 13 | 3.8 | 0.2...16 | 0.59 | 221901 | 221902 | 221903 |
| | G ¾ | 20 | 8.5 | 0.2...16 | 0.89 | 221904 | 221905 | 221906 |
| | G 1 | 20 | 8.5 | 0.2...16 | 1.0 | 221907 | 221908 | 221909 |
| | G 1 | 25 | 12 | 0.2...16 | 1.3 | 221910 | 221911 | 221912 |
| | G 1¼ | 25 | 12 | 0.2...16 | 1.5 | 221913 | 221914 | 221915 |
| | G 1¼ | 40 | 23 | 0.2...16 | 2.7 | 270136 | 270137 | 270138 |
| | G 1½ | 40 | 30 | 0.2...16 | 3.0 | 221916 | 221917 | 221918 |
| | G 2 | 40 | 30 | 0.2...16 | 3.2 | 221919 | 221920 | 221921 |
| | G 2 | 50[4)] | 40 | 0.2...16 | 4.5 | 253162 | 253163 | 253164 |
| | G 2½ | 50[4)] | 40 | 0.2...16 | 5.2 | 253165 | 253166 | 253167 |

o. r. = on request
1.) Measurement at + 20 °C, 1 bar at the valve inlet and free outlet
2.) A pressure difference of 0.5 bar is required to open the full cross-section.
3.) Pressure data: overpressure to atmospheric pressure
4.) Approved for drinking water according to KTW and W270

### Circuit function B

**Note:**
Please note that the cable plug must be ordered separately, see **"8.5. Ordering chart accessories" on page 20** or separate data sheet for **Type 2518** ▶.

| Circuit function | Port connection | Orifice | $K_v$ value water[1) 2)] | Pressure range[3)] | Weight | Article no. | | |
|---|---|---|---|---|---|---|---|---|
| | | | | | | 024/DC | 024/50 | 230/50 |
| | | [mm] | [m³/h] | [bar] | [kg] | [V/Hz] | [V/Hz] | [V/Hz] |
| **Seal material NBR, epoxy coil, medium temperature - 10 °C...+ 80 °C** | | | | | | | | |
| **CF B**<br>2/2-way solenoid valve<br>Servo-controlled<br>Normally open<br> 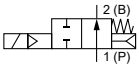 | G ¼ | 10 | 1.5 | 0.2...16 | 0.43 | 322523 | 322524 | 322525 |
| | G ⅜ | 10 | 1.9 | 0.2...16 | 0.40 | 322526 | 322527 | 322528 |
| | G ⅜ | 13 | 3.8 | 0.2...16 | 0.58 | 221923 | 221924 | 221925 |
| | G ½ | 13 | 3.8 | 0.2...16 | 0.54 | 221926 | 221928 | 221929 |
| | G ¾ | 13 | 3.8 | 0.2...16 | 0.59 | 221930 | 221931 | 221933 |
| | G ¾ | 20 | 8.5 | 0.2...16 | 0.89 | 221934 | 221935 | 221936 |
| | G 1 | 20 | 8.5 | 0.2...16 | 1.0 | 221937 | 221938 | 221939 |
| | G 1 | 25 | 12 | 0.2...16 | 1.3 | 221940 | 221941 | 221942 |
| | G 1¼ | 25 | 12 | 0.2...16 | 1.5 | 221943 | 221944 | 221945 |
| | G 1¼ | 40 | 23 | 0.2...16 | 2.7 | 270139 | 270140 | 270141 |
| | G 1½ | 40 | 30 | 0.2...16 | 3.0 | 221946 | 221947 | 221948 |
| | G 2 | 40 | 30 | 0.2...16 | 3.2 | 221949 | 221950 | 221951 |
| | G 2 | 50 | 40 | 0.2...16 | 4.5 | 253174 | 253175 | 253176 |
| | G 2½ | 50 | 40 | 0.2...16 | 5.2 | 253177 | 253178 | 253179 |

1.) Measurement at + 20 °C, 1 bar at the valve inlet and free outlet
2.) A pressure difference of 0.5 bar is required to open the full cross-section.
3.) Pressure data: overpressure to atmospheric pressure



DTS 1000152082 EN Version: R Status: RL (released | freigegeben | validé) printed: 18.12.2024

RIEGLER & Co. KG
Schützenstraße 27
72574 Bad Urach
Tel. +49 7125 9497-642
technik@riegler.de



Subject to technical changes and errors reserved.
The proficiency testing is the responsibility of the user.
20.10.2026 The specified data do not represent legally guaranteed properties.

### Circuit function A, with Kick and Drop coil

**Note:**

- Please note that the cable plug must be ordered separately, see "8.5. Ordering chart accessories" on page 20 or separate data sheet for **Type 2518 ▸**.
- The Kick and Drop coil (AC/DC) features integrated electronics for short-term power increase and decrease in double coil t echnology.

| Circuit function | Port connection | Orifice | $K_v$ value water[1.) 2.)] | Pressure range[3.)] | Weight | Article no. | |
|---|---|---|---|---|---|---|---|
| | | | | | | 024 / AC/DC | 230 / 50...60 |
| | | [mm] | [m³/h] | [bar] | [kg] | [V/Hz] | [V/Hz] |
| **Seal material FKM, epoxy coil, medium temperature 0 °C...+ 120 °C** | | | | | | | |
| **CF A**<br>2/2-way solenoid valve<br>Servo-controlled<br>Normally closed<br> 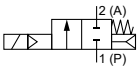 | G ¼ | 10 | 1.5 | 0.2...16 | 0.43 | 20046906 | 20046961 |
| | G ⅜ | 10 | 1.9 | 0.2...16 | 0.40 | 20046907 | 20046960 |
| | G ½ | 13 | 3.8 | 0.2...16 | 0.54 | 20046908 | 20046963 |
| | G ¾ | 20 | 8.5 | 0.2...16 | 0.89 | 20046909 | 20046964 |
| | G 1 | 25 | 12 | 0.2...16 | 1.3 | 20046910 | 20046965 |
| | G 1¼ | 40 | 23 | 0.2...16 | 2.7 | 20046911 | 20046966 |
| | G 1½ | 40 | 30 | 0.2...16 | 3.0 | 20046912 | 20046967 |
| | G 2 | 50 | 40 | 0.2...16 | 4.5 | 20046913 | 20046968 |
| | G 2½ | 50 | 40 | 0.2...16 | 5.2 | 20046914 | 20046969 |

1.) Measurement at + 20 °C, 1 bar at the valve inlet and free outlet
2.) A pressure difference of 0.5 bar is required to open the full cross-section.
3.) Pressure data: overpressure to atmospheric pressure

### Circuit function B, with Kick and Drop coil

**Note:**

- Please note that the cable plug must be ordered separately, see "8.5. Ordering chart accessories" on page 20 or separate data sheet for **Type 2518 ▸**.
- The Kick and Drop coil (AC/DC) features integrated electronics for short-term power increase and decrease in double coil t echnology.

| Circuit function | Port connection | Orifice | $K_v$ value water[1.) 2.)] | Pressure range[3.)] | Weight | Article no. | |
|---|---|---|---|---|---|---|---|
| | | | | | | 024 / AC/DC | 230 / 50...60 |
| | | [mm] | [m³/h] | [bar] | [kg] | [V/Hz] | [V/Hz] |
| **Seal material FKM, epoxy coil, medium temperature 0 °C...+ 120 °C** | | | | | | | |
| **CF B**<br>2/2-way solenoid valve<br>Servo-controlled<br>Normally open<br> 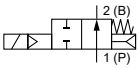 | G ¼ | 10 | 1.5 | 0.2...16 | 0.43 | 20046924 | 20046970 |
| | G ⅜ | 10 | 1.9 | 0.2...16 | 0.40 | 20046925 | 20046971 |
| | G ½ | 13 | 3.8 | 0.2...16 | 0.54 | 20046927 | 20046972 |
| | G ¾ | 20 | 8.5 | 0.2...16 | 0.89 | 20046928 | 20046973 |
| | G 1 | 25 | 12 | 0.2...16 | 1.3 | 20046929 | 20046974 |
| | G 1¼ | 40 | 23 | 0.2...16 | 2.7 | 20046930 | 20046975 |
| | G 1½ | 40 | 30 | 0.2...16 | 3.0 | 20046931 | 20046976 |
| | G 2 | 50 | 40 | 0.2...16 | 4.5 | 20046932 | 20046978 |
| | G 2½ | 50 | 40 | 0.2...16 | 5.2 | 20046933 | 20046979 |

1.) Measurement at + 20 °C, 1 bar at the valve inlet and free outlet
2.) A pressure difference of 0.5 bar is required to open the full cross-section.
3.) Pressure data: overpressure to atmospheric pressure

DTS 1000152082 EN Version: R Status: RL (released | freigegeben | validé) printed: 18.12.2024



RIEGLER & Co. KG
Schützenstraße 27
72574 Bad Urach
Tel. +49 7125 9497-642
technik@riegler.de



Subject to technical changes and errors reserved.
The proficiency testing is the responsibility of the user.
20.10.2026 The specified data do not represent legally guaranteed properties.

**Standard version with stainless steel body**

**Circuit function A**

**Note:**
Please note that the cable plug must be ordered separately, see "8.5. Ordering chart accessories" on page 20 or separate data sheet for **Type 2518** ▶.

| Circuit function | Port connection | Orifice | $K_V$ value water[1) 2)] | Pressure range[3)] | Weight | Article no. | | |
|---|---|---|---|---|---|---|---|---|
| | | | | | | 024/DC | 024/50...60 | 230/50...60 |
| | | [mm] | [m³/h] | [bar] | [kg] | [V/Hz] | [V/Hz] | [V/Hz] |
| **Seal material NBR, polyamide coil, medium temperature - 10 °C...+ 80 °C** | | | | | | | | |
| **CF A** 2/2-way solenoid valve Servo-controlled Normally closed 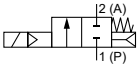  | G ¼ | 10 | 1.5 | 0.2...16 | 0.43 | 322529 | 322530 | 322531 |
| | G ⅜ | 10 | 1.9 | 0.2...16 | 0.40 | 322532 | 322533 | 322534 |
| | G ½ | 13 | 3.8 | 0.2...16 | 0.54 | 221968 | 221969 | 221970 |
| | G ¾ | 20 | 8.5 | 0.2...16 | 0.86 | 221971 | 221972 | 221973 |
| | G 1 | 20 | 8.5 | 0.2...16 | 0.97 | 221974 | 221975 | 221976 |
| | G 1 | 25 | 12 | 0.2...16 | 1.3 | 221977 | 221978 | 221979 |
| | G 1¼ | 25 | 12 | 0.2...16 | 1.4 | 221980 | 221981 | 221982 |
| | G 1½ | 40 | 30 | 0.2...16 | 2.8 | 221983 | 221984 | 221985 |
| | G 2 | 40 | 30 | 0.2...16 | 3.0 | 221986 | 221987 | 221988 |
| **Seal material FKM, epoxy coil, medium temperature 0 °C...+ 120 °C** | | | | | | | | |
| **CF A** 2/2-way solenoid valve Servo-controlled Normally closed 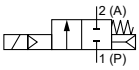  | G ¼ | 10 | 1.5 | 0.2...16 | 0.43 | 322535 | 322536 | 322537 |
| | G ⅜ | 10 | 1.9 | 0.2...16 | 0.40 | 322538 | 322539 | 322540 |
| | G ½ | 13 | 3.8 | 0.2...16 | 0.54 | 221989 | 221990 | 221991 |
| | G ¾ | 20 | 8.5 | 0.2...16 | 0.86 | 221992 | 221993 | 221994 |
| | G 1 | 20 | 8.5 | 0.2...16 | 0.97 | 221995 | 221996 | 221997 |
| | G 1 | 25 | 12 | 0.2...16 | 1.3 | 221998 | 221999 | 222000 |
| | G 1¼ | 25 | 12 | 0.2...16 | 1.4 | 222001 | 222002 | 222003 |
| | G 1½ | 40 | 30 | 0.2...16 | 2.8 | 222004 | 222005 | 222006 |
| | G 2 | 40 | 30 | 0.2...16 | 3.0 | 222007 | 222008 | 222009 |
| **Seal material FKM, epoxy coil, medium temperature 0 °C...+ 120 °C, with manual override** | | | | | | | | |
| **CF A** 2/2-way solenoid valve Servo-controlled Normally closed 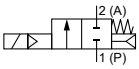  | G ¼ | 10 | 1.5 | 0.2...16 | 0.43 | 323894 | o. r. | 323968 |
| | G ⅜ | 10 | 1.9 | 0.2...16 | 0.40 | 323971 | o. r. | 323972 |
| | G ½ | 13 | 3.8 | 0.2...16 | 0.54 | 323973 | o. r. | 323975 |
| | G ¾ | 20 | 8.5 | 0.2...16 | 0.86 | 323977 | o. r. | 323978 |
| | G 1 | 25 | 12 | 0.2...16 | 1.3 | 323979 | o. r. | 323980 |
| | G 1¼ | 25 | 1.4 | 0.2...16 | 1.4 | 323982 | o. r. | 323984 |
| | G 1½ | 40 | 30 | 0.2...16 | 2.8 | 323986 | o. r. | 323987 |
| | G 2 | 40 | 30 | 0.2...16 | 3.0 | 323988 | o. r. | 323989 |
| **Seal material EPDM, polyamide coil, medium temperature - 30 °C...+ 90 °C** | | | | | | | | |
| **CF A** 2/2-way solenoid valve Servo-controlled Normally closed 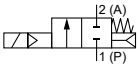  | G ¼ | 10 | 1.5 | 0.2...16 | 0.43 | 322541 | 322542 | 322543 |
| | G ⅜ | 10 | 1.9 | 0.2...16 | 0.40 | 322544 | 322545 | 322546 |
| | G ½ | 13 | 3.8 | 0.2...16 | 0.54 | 222010 | 222011 | 222012 |
| | G ¾ | 20 | 8.5 | 0.2...16 | 0.86 | 222013 | 222014 | 222015 |
| | G 1 | 20 | 8.5 | 0.2...16 | 0.97 | 222016 | 222017 | 222018 |
| | G 1 | 25 | 12 | 0.2...16 | 1.3 | 222019 | 222020 | 222021 |
| | G 1¼ | 25 | 12 | 0.2...16 | 1.4 | 222022 | 222023 | 222024 |
| | G 1½ | 40 | 30 | 0.2...16 | 2.8 | 222025 | 222026 | 222027 |
| | G 2 | 40 | 30 | 0.2...16 | 3.0 | 222028 | 222029 | 222031 |

o. r. = on request
1.) Measurement at + 20 °C, 1 bar at the valve inlet and free outlet
2.) A pressure difference of 0.5 bar is required to open the full cross-section.
3.) Pressure data: overpressure to atmospheric pressure



DTS 1000152082 EN Version: R Status: RL (released | freigegeben | validé) printed: 18.12.2024

RIEGLER & Co. KG
Schützenstraße 27
72574 Bad Urach
Tel. +49 7125 9497-642
technik@riegler.de



Subject to technical changes and errors reserved.
The proficiency testing is the responsibility of the user.
20.10.2026 The specified data do not represent legally guaranteed properties.

### Circuit function B

**Note:**
Please note that the cable plug must be ordered separately, see "8.5. Ordering chart accessories" on page 20 or separate data sheet for **Type 2518** ▶.

| Circuit function | Port connection | Orifice | $K_v$ value water[1) 2)] | Pressure range[3)] | Weight | Article no. | | |
|---|---|---|---|---|---|---|---|---|
| | | | | | | 024/DC | 024/50 | 230/50 |
| | | [mm] | [m³/h] | [bar] | [kg] | [V/Hz] | [V/Hz] | [V/Hz] |
| **Seal material FKM, epoxy coil, medium temperature 0 °C...+120 °C** | | | | | | | | |
| **CF B**<br>2/2-way solenoid valve<br>Servo-controlled<br>Normally open<br> 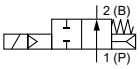 | G ¼ | 10 | 1.5 | 0.2...16 | 0.43 | 322547 | 322548 | 322549 |
| | G ⅜ | 10 | 1.9 | 0.2...16 | 0.40 | 322550 | 322551 | 322552 |
| | G ½ | 13 | 3.8 | 0.2...16 | 0.54 | 228387 | 228388 | 228389 |
| | G ¾ | 20 | 8.5 | 0.2...16 | 0.86 | 228390 | 228391 | 228392 |
| | G 1 | 25 | 12 | 0.2...16 | 1.3 | 228393 | 228394 | 228395 |
| | G 1¼ | 25 | 12 | 0.2...16 | 1.4 | 228396 | 228397 | 228398 |
| | G 1½ | 40 | 30 | 0.2...16 | 2.8 | 228399 | 228400 | 228401 |
| | G 2 | 40 | 30 | 0.2...16 | 3.0 | 228402 | 228403 | 228404 |

1.) Measurement at + 20 °C, 1 bar at the valve inlet and free outlet
2.) A pressure difference of 0.5 bar is required to open the full cross-section.
3.) Pressure data: overpressure to atmospheric pressure

### ATEX/IECEx cable version

**Note:**
- The maximum medium temperature must never exceed the permitted temperature class (T4: + 135 °C, T5: + 100 °C, T6: + 85 °C) minus 5 K.
- Delivery includes 3 metre cable.
- Refer to chapter "3. Approvals and conformities" on page 4 for more information about the approvals.

| Circuit function | Port connection | Orifice | $K_v$ value water[1) 2)] | Pressure range[3)] | Weight | Article no. | |
|---|---|---|---|---|---|---|---|
| | | | | | | 024 / AC/DC | 230 / AC/DC |
| | | [mm] | [m³/h] | [bar] | [kg] | [V/Hz] | [V/Hz] |
| **Seal material NBR, brass body, medium temperature - 10 °C...+ 80 °C** | | | | | | | |
| **CF A**<br>2/2-way solenoid valve<br>Servo-controlled<br>Normally closed<br> 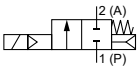 | G ¼ | 10 | 1.5 | 0.2...16 | 0.62 | 349656 | 349658 |
| | G ⅜ | 10 | 1.9 | 0.2...16 | 0.59 | 349660 | 349662 |
| | G ½ | 13 | 3.8 | 0.2...16 | 0.84 | 349690 | 349696 |
| | G ¾ | 20 | 8.5 | 0.2...16 | 1.2 | 349717 | 349719 |
| | G 1 | 25 | 12 | 0.2...16 | 1.7 | 349731 | 349734 |
| | G 1¼ | 25 | 12 | 0.2...16 | 1.8 | 349737 | 349739 |
| | G 1¼ | 40 | 23 | 0.2...16 | 3.0 | 349751 | 349754 |
| | G 1½ | 40 | 30 | 0.2...16 | 3.3 | 349756 | 349758 |
| | G 2 | 40 | 30 | 0.2...16 | 3.5 | 349760 | 349762 |
| | G 2 | 50 | 40 | 0.2...16 | 4.8 | 349773 | 349775 |
| | G 2½ | 50 | 40 | 0.2...16 | 5.5 | 349777 | 349778 |
| **Seal material FKM, stainless steel body, medium temperature 0 °C...+ 90 °C** | | | | | | | |
| **CF A**<br>2/2-way solenoid valve<br>Servo-controlled<br>Normally closed<br> 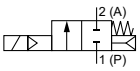 | G ¼ | 10 | 1.5 | 0.2...16 | 0.62 | 349665 | 349666 |
| | G ⅜ | 10 | 1.9 | 0.2...16 | 0.59 | 349669 | 349670 |
| | G ½ | 13 | 3.8 | 0.2...16 | 0.84 | 349707 | 349708 |
| | G ¾ | 20 | 8.5 | 0.2...16 | 1.2 | 349724 | 349727 |
| | G 1 | 25 | 12 | 0.2...16 | 1.6 | 349742 | 349744 |
| | G 1¼ | 25 | 12 | 0.2...16 | 1.7 | 349747 | 349750 |
| | G 1½ | 40 | 30 | 0.2...16 | 3.1 | 349765 | 349767 |
| | G 2 | 40 | 30 | 0.2...16 | 3.3 | 349770 | 349771 |

1.) Measurement at + 20 °C, 1 bar at the valve inlet and free outlet
2.) A pressure difference of 0.5 bar is required to open the full cross-section.
3.) Pressure data: overpressure to atmospheric pressure



DTS 1000152082 EN Version: R Status: RL (released | freigegeben | validé) printed: 18.12.2024

RIEGLER & Co. KG
Schützenstraße 27
72574 Bad Urach
Tel. +49 7125 9497-642
technik@riegler.de



Subject to technical changes and errors reserved.
The proficiency testing is the responsibility of the user.
20.10.2026 The specified data do not represent legally guaranteed properties.

**ATEX/IECEx terminal box version**

**Note:**

- The maximum medium temperature must never exceed the permitted temperature class (T4: + 135 °C, T5: + 100 °C, T6: + 85 °C) minus 5 K.
- Refer to chapter "3. Approvals and conformities" on page 4 for more information about the approvals.

| Circuit function | Port connection | Orifice | $K_V$ value water[1) 2)] | Pressure range[3)] | Weight | Article no. | |
|---|---|---|---|---|---|---|---|
| | | | | | | 024 / AC/DC | 230 / AC/DC |
| | | [mm] | [m³/h] | [bar] | [kg] | [V/Hz] | [V/Hz] |
| **Seal material NBR, brass body, medium temperature -10 °C...+ 80 °C** | | | | | | | |
| **CF A**<br>2/2-way solenoid valve<br>Servo-controlled<br>Normally closed<br> 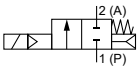 | G ¼ | 10 | 1.5 | 0.2...16 | 0.62 | 349657 | 349659 |
| | G ⅜ | 10 | 1.9 | 0.2...16 | 0.59 | 349661 | 349663 |
| | G ½ | 13 | 3.8 | 0.2...16 | 0.84 | 349691 | 349697 |
| | G ¾ | 20 | 8.5 | 0.2...16 | 1.2 | 349718 | 349720 |
| | G 1 | 25 | 12 | 0.2...16 | 1.7 | 349733 | 349735 |
| | G 1¼ | 25 | 12 | 0.2...16 | 1.8 | 349738 | 349740 |
| | G 1¼ | 40 | 23 | 0.2...16 | 3.0 | 349753 | 349755 |
| | G 1½ | 40 | 30 | 0.2...16 | 3.3 | 349757 | 349759 |
| | G 2 | 40 | 30 | 0.2...16 | 3.5 | 349761 | 349763 |
| | G 2 | 50 | 40 | 0.2...16 | 4.8 | 349774 | 349776 |
| **Seal material FKM, stainless steel body, medium temperature 0 °C...+ 90 °C** | | | | | | | |
| **CF A**<br>2/2-way solenoid valve<br>Servo-controlled<br>Normally closed<br> 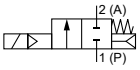 | G ¼ | 10 | 1.5 | 0.2...16 | 0.62 | 349664 | 349667 |
| | G ⅜ | 10 | 1.9 | 0.2...16 | 0.59 | 349668 | 349671 |
| | G ½ | 13 | 3.8 | 0.2...16 | 0.84 | 349705 | 349709 |
| | G ¾ | 20 | 8.5 | 0.2...16 | 1.2 | 349725 | 349728 |
| | G 1 | 25 | 12 | 0.2...16 | 1.6 | 349743 | 349745 |
| | G 1¼ | 25 | 12 | 0.2...16 | 1.7 | 349748 | 349749 |
| | G 1½ | 40 | 30 | 0.2...16 | 3.1 | 349766 | 349768 |
| | G 2 | 40 | 30 | 0.2...16 | 3.3 | 349769 | 349772 |

1.) Measurement at + 20 °C, 1 bar at the valve inlet and free outlet
2.) A pressure difference of 0.5 bar is required to open the full cross-section.
3.) Pressure data: overpressure to atmospheric pressure

DTS 1000152082 EN Version: R Status: RL (released | freigegeben | validé) printed: 18.12.2024



RIEGLER & Co. KG
Schützenstraße 27
72574 Bad Urach
Tel. +49 7125 9497-642
technik@riegler.de



Subject to technical changes and errors reserved.
The proficiency testing is the responsibility of the user.
20.10.2026 The specified data do not represent legally guaranteed properties.

**Compressor relief valve with brass body**

**Note:**

- Please note that the cable plug must be ordered separately, see "8.5. Ordering chart accessories" on page 20 or separate data sheet for **Type 2518** ▸.
- The valve is open in the rest position. The medium also flows via the exhaust port on the solenoid.

| Circuit function | Port connection | Orifice | $K_V$ value water[1.) 2.)] | Pressure range[3.)] | Weight | Article no. | | | |
|---|---|---|---|---|---|---|---|---|---|
| | | | | | | 024/DC | 024/50...60 | 110/50...60 | 230/50...60 |
| | | [mm] | [m³/h] | [bar] | [kg] | [V/Hz] | [V/Hz] | [V/Hz] | [V/Hz] |
| **Seal material FKM, polyamide coil, medium temperature 0 °C...+ 90 °C, DN 10** | | | | | | | | | |
| **CF B** 2/2-way solenoid valve Servo-controlled Normally open 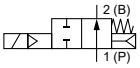  | G ⅜ | 10 | 1.9 | 0.2...16 | 0.43 | 330985 | 330986 | 330987 | 330988 |
| | G ½ | 10 | 1.9 | 0.2...16 | 0.40 | 330989 | 331007 | 331008 | 331009 |
| **Seal material FKM, polyamide coil, medium temperature 0 °C...+ 90 °C, DN 13** | | | | | | | | | |
| **CF B** 2/2-way solenoid valve Servo-controlled Normally open 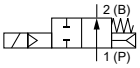  | G ⅜ | 13 | 3.6 | 0.5...16 | 0.58 | 310663 | 310662 | 310661 | 310659 |
| | G ½ | 13 | 3.6 | 0.5...16 | 0.54 | 310667 | 310666 | 310665 | 310664 |

1.) Measurement at + 20 °C, 1 bar at the valve inlet and free outlet
2.) A pressure difference of 0.5 bar is required to open the full cross-section.
3.) Pressure data: overpressure to atmospheric pressure

| Further versions on request | | | |
|---|---|---|---|
| | **Material** Brass dezincification resistant | | **Temperature** • EPDM version up to + 100 °C with epoxy coil • FKM version up to + 120 °C with epoxy coil |
| | **Process connection** NPT, Rc | | **Approval** Further information can be found in chapter "3. Approvals and conformities" on page 4. |
| | **Voltage** Further voltages | | |

## 8.5. Ordering chart accessories

**Cable plug Type 2518, form A according to DIN EN 175301 - 803**

**Note:**
For further versions see data sheet **Type 2518** ▸.

| Cable plug | Dimensions | Version | Voltage | Article no. |
|---|---|---|---|---|
| | 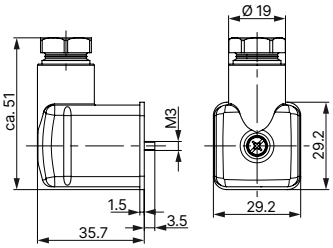  | Without circuitry (AC/DC) | 0...250 V AC/DC | 314802 |
| | | With LED (AC/DC) | 12...24 V AC/DC | 314812 |
| | | With LED and varistor (AC/DC) | 12...24 V AC/DC | 314820 |
| | | With rectifier, LED and varistor | 12...24 V AC/DC | 314816 |
| | | Without circuitry (AC/DC) with silicone seal for higher ambient temperature, e.g. steam version (NA07) | 0...250 V AC/DC | 361687 |

**Visit product website** ▸



DTS 1000152082 EN Version: R Status: RL (released | freigegeben | validé) printed: 18.12.2024

RIEGLER & Co. KG
Schützenstraße 27
72574 Bad Urach
Tel. +49 7125 9497-642
technik@riegler.de



Subject to technical changes and errors reserved.
The proficiency testing is the responsibility of the user.
20.10.2026 The specified data do not represent legally guaranteed properties.

### Cable plug Type 2509, form A according to DIN EN 175301 - 803

**Note:**

- Without circuitry (standard)
- Refer to data sheet **Type 2509** ▸ for more information about the cable plug.

| Cable plug | Dimensions | Version | Voltage | Article no. |
|---|---|---|---|---|
| | 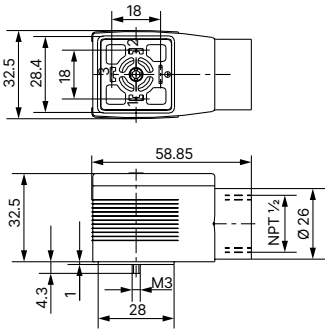  | Without circuitry | 0...250 V AC/DC | 137943 |

### Cable glands for ATEX/IECEx terminal box

**Note:**

- A cable gland in polyamide version is included in the delivery. A nickel-plated brass version can be ordered at surcharge.
- Refer to "7.1. Cable glands for ATEX/IECEx terminal box" on page 12 for more information about Ex cable glands.
- Refer to "7.2. Special tool to turn the terminal box" on page 13 for more information about Special wrench.

| Description | Article no. |
|---|---|
| Ex cable gland, nickel-plated brass, 6...13 mm [1.)] | 773278 |
| Ex cable gland, polyamide, 7...13 mm [1.)] | 773277 |
| Set SC02-AC10: special wrench [2.)] incl. service manual | 293488 |

1.) Cable diameter
2.) Not included in the scope of delivery of the valve

### Mounting set for DN 10

| Cable plug | Dimensions | Description | Article no. |
|---|---|---|---|
| 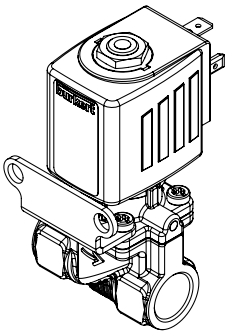 | 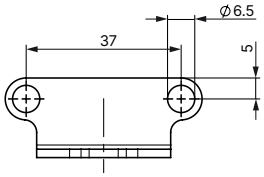  | Mounting bracket kit (consisting of mounting bracket and screws) | 365730 |

DTS 1000152082 EN Version: R Status: RL (released | freigegeben | validé) printed: 18.12.2024



RIEGLER & Co. KG
Schützenstraße 27
72574 Bad Urach
Tel. +49 7125 9497-642
technik@riegler.de



Subject to technical changes and errors reserved.
The proficiency testing is the responsibility of the user.
20.10.2026 The specified data do not represent legally guaranteed properties.