2/2-way solenoid valve

Art. No. **192098**

Type No. **MVB.38.MS.230.N.BV.10**



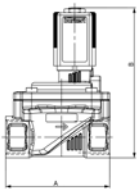

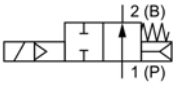

Exemplary illustration

The Type 6281 valve is a servo-assisted diaphragm valve. A minimum differential pressure is always required for the valve to operate. Different diaphragm materials and operating principles are available to suit the respective applications. The standard brass body meets European drinking water requirements. Dezincification-resistant brass is available for other markets. The range of body materials is complemented by a stainless steel version. To reduce electrical power consumption during operation, coils with integrated kick-and-drop electronics using dual-coil technology are available. The valve can also be supplied with a manual override for easy maintenance and commissioning.

Technical data

Thread	G 3/8 IT
Operating pressure	0.2 - 16 bar
Voltage	230 V AC
Housing	brass
Valve seat	brass
Internal parts	stainless steel, PPS
Sealant	NBR
Medium temperature	-10 to 80 °C
Ambient temperature	0 to 55 °C
Protection IP	IP 65 (with connector socket fitted)
Electrical connection	pin terminal acc. to DIN EN 175301-803, type A
Max. operating pressure	16 bar
Min. medium temperature	-10 °C
Max. medium temperature	80 °C
Min. ambient temperature	0 °C
Max. ambient temperature	55 °C
Function	normally open (NO)
DN	10 mm
A	50.0 mm
B	94.1 mm

RIEGLER & Co. KG
Schützenstraße 27
72574 Bad Urach
Tel. +49 7125 9497-642
technik@riegler.de

Subject to technical changes and errors reserved.
The proficiency testing is the responsibility of the user.
20.10.2026 The specified data do not represent legally guaranteed properties.

Commercial data

Customs tariff number	84818079
Country of origin	DE
eCl@ss 5.1.4	27220601
eCl@ss 9.0	27220601
UNSPSC_Code_v190501	40141605
UNSPSC_CodeDesc_v190501	Solenoid valves

DATA SHEET

Type 6281

bürkert
FLUID CONTROL SYSTEMS







Servo-assisted 2/2-way diaphragm valve

- Servo-assisted diaphragm valve up to DN 50
- Vibration-resistant, centrally screwed coil system
- Damped design for quiet closing
- Energy-saving double coil technology with kick and drop variant
- Explosion-proof variants

Product variants described in the data sheet may differ from the product presentation and description.

Can be combined with



Type 2518
Cable plug,
form A according to
DIN EN 175301-803



Type 2509
Cable plug,
form A according to
DIN EN 175301-803

Type description

Valve 6281 is a servo-assisted diaphragm valve. A minimum differential pressure is always required for the valve to function. Various diaphragm materials and circuit functions are available depending on the actual application. The standard brass body meets European drinking water requirements. For other markets, dezincification-resistant brass is available. The range includes a variant with a stainless steel body. To reduce electrical power consumption during operation, coils with integrated Kick-and-Drop (KD) electronics featuring double coil technology are available. The valve can be supplied with manual operation for easy maintenance and commissioning.

DTS 1000152082 EN Version: R Status: RL (released | freigegeben | validé) printed: 18.12.2024

Standard | EU | en | 2024-08-28 | 19
© Christian Bürkert GmbH & Co. KG, Subject to alteration

Visit product website

RIEGLER & Co. KG
Schützenstraße 27
72574 Bad Urach
Tel. +49 7125 9497-642
technik@riegler.de

Subject to technical changes and errors reserved.
The proficiency testing is the responsibility of the user.
20.10.2026 The specified data do not represent legally guaranteed properties.

Table of contents

1. General technical data 3

2. Circuit functions 4

3. Approvals and conformities 4

3.1. General notes ... 4
3.2. Conformity ... 4
3.3. Standards ... 4
3.4. Explosion protection ... 4
3.5. North America (USA/Canada) ... 5
3.6. Drinking water ... 5
3.7. Others ... 5
DNV GL classification ... 5
Oxygen ... 5
VDE – Certificate of conformity with factory surveillance ... 6

4. Materials 6

4.1. Bürkert resistApp ... 6
4.2. Material specifications ... 6

5. Dimensions 7

5.1. Standard version ... 7
5.2. ATEX/IECEx cable version ... 9
5.3. ATEX/IECEx terminal box version ... 10
5.4. Compressor relief valves ... 11

6. Performance specifications 12

6.1. Power consumption ... 12
6.2. Power consumption Kick and Drop coil ... 12

7. Product accessories 12

7.1. Cable glands for ATEX/IECEx terminal box ... 12
7.2. Special tool to turn the terminal box ... 13

8. Ordering information 13

8.1. Bürkert eShop ... 13
8.2. Bürkert product filter ... 13
8.3. Bürkert Product Enquiry Form ... 13
8.4. Ordering chart ... 14
Standard version with brass body ... 14
Standard version with stainless steel body ... 17
ATEX/IECEx cable version ... 18
ATEX/IECEx terminal box version ... 19
Compressor relief valve with brass body ... 20
8.5. Ordering chart accessories ... 20
Cable plug Type 2518, form A according to DIN EN 175301-803 ... 20
Cable plug Type 2509, form A according to DIN EN 175301-803 ... 21
Cable glands for ATEX/IECEx terminal box ... 21
Mounting set for DN 10 ... 21

DTS 1000152082 EN Version: R Status: RL (released | freigegeben | validé) printed: 18.12.2024

RIEGLER & Co. KG
Schützenstraße 27
72574 Bad Urach
Tel. +49 7125 9497-642
technik@riegler.de

Subject to technical changes and errors reserved.
The proficiency testing is the responsibility of the user.
20.10.2026 The specified data do not represent legally guaranteed properties.

1. General technical data

Product properties	
Dimensions	Further information can be found in chapter "5. Dimensions" on page 7.
Material	
Seal	NBR, EPDM, FKM
Body	Brass acc. to DIN EN 50930 - 6, stainless steel (dezincification resistant on request)
Inner valve parts	Stainless steel, brass, plastic (PPS)
Orifice	DN 10...DN 50
Circuit function	Further information can be found in chapter "2. Circuit functions" on page 4.
Thermal insulation class of solenoid coil	Polyamide coil class B Epoxy coil class H
Performance data	
Duty cycle	100 % continuous operation
Switching time [1)]	Opening: 0.1...1.5 s Closing: 0.2...4 s
Electrical data	
Operating voltage	24 V/DC, 24 V/UC, 24 V/50...60 Hz, 230 V/UC, 230 V/50...60 Hz
Power consumption	Further information can be found in chapter "6. Performance specifications" on page 12.
Voltage tolerance	± 10 %
Medium data	
Operating medium	Medium that does not attack the housing and sealing materials Further information can be found in chapter "4.1. Bürkert resistApp" on page 6.
Medium temperature	
NBR	- 10 °C...+ 80 °C
EPDM	- 30 °C...+ 90 °C (with epoxy coil to + 100 °C) 0 °C...+ 60 °C (with drinking water approval according to UBA (PF36))
FKM	0 °C...+ 90 °C (with epoxy coil to + 120 °C)
Process/Port connection & communication	
Electrical connection	• Cable plug **Type 2518** ▶, form A according to DIN EN 175301 - 803 Further information can be found in chapter "Cable plug Type 2518, form A according to DIN EN 175301 - 803" on page 20. • Cable plug **Type 2509** ▶, form A according to DIN EN 175301 - 803 Further information can be found in chapter "Cable plug Type 2509, form A according to DIN EN 175301 - 803" on page 21.
Approvals and conformities	
Directives	CE, EAC
Degree of protection	IP65 with cable plug, cable connection and terminal box
Explosion protection	Further information can be found in chapter "3.4. Explosion protection" on page 4.
North America (USA/Canada)	Further information can be found in chapter "3.5. North America (USA/Canada)" on page 5.
Drinking water	Further information can be found in chapter "3.6. Drinking water" on page 5.
Others	Further information can be found in chapter "3.7. Others" on page 5.
Environment and installation	
Installation	As required, preferably with actuator upright
Ambient temperature	
Standard version	Max. + 55 °C
Version with kick and drop coil	Max. + 70 °C (max. 30 switching operations/min) Max. + 85 °C (max. 1 switching operation/min) Max. + 55 °C (for versions with UR/UL approval)

1.) Measurement at + 20 °C, 6 bar at the valve inlet and free outlet, opening: pressure reduction to 90 % of the difference to the flow pressure, closing: pressure build-up to 90 % of the inlet pressure

DTS 1000152082 EN Version: R Status: RL (released | freigegeben | validé) printed: 18.12.2024

RIEGLER & Co. KG
Schützenstraße 27
72574 Bad Urach
Tel. +49 7125 9497-642
technik@riegler.de

Subject to technical changes and errors reserved.
The proficiency testing is the responsibility of the user.
20.10.2026 The specified data do not represent legally guaranteed properties.

2. Circuit functions

Symbol	Description
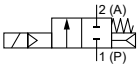	**Circuit function A (CF A)** 2/2-way solenoid valve Servo-controlled Normally closed
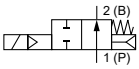	**Circuit function B (CF B)** 2/2-way solenoid valve Servo-controlled Normally open

3. Approvals and conformities

3.1. General notes

- The approvals and conformities listed below must be stated when making enquiries. This is the only way to ensure that the product complies with all required specifications.
- Not all available versions can be supplied with the below mentioned approvals or conformities.

3.2. Conformity

In accordance with the Declaration of Conformity, the product is compliant with the EU Directives.

3.3. Standards

The applied standards which are used to demonstrate compliance with the EU Directives are listed in the EU-Type Examination Certificate and/or the EU Declaration of Conformity.

3.4. Explosion protection

Approval	Description
	Optional: Explosion protection **ATEX:** EPS 18 ATEX 1232 X II 2G Ex mb IIC T4 Gb II 2D Ex mb IIIC T130 °C Db II 2G Ex eb mb IIC T4 Gb II 2D Ex mb tb IIIC T130 °C Db **IECEx:** IECEx EPS 18.0110 X Ex mb IIC T4 Gb Ex mb IIIC T130 °C Db Ex eb mb IIC T4 Gb Ex mb tb IIIC T130 °C Db

DTS 1000152082 EN Version: R Status: RL (released | freigegeben | validé) printed: 18.12.2024

RIEGLER & Co. KG
Schützenstraße 27
72574 Bad Urach
Tel. +49 7125 9497-642
technik@riegler.de

Subject to technical changes and errors reserved.
The proficiency testing is the responsibility of the user.
20.10.2026 The specified data do not represent legally guaranteed properties.

3.5. North America (USA/Canada)

Approval	Description
LISTED	**Valid for valves: UL Listed for the USA** The valves are UL Listed for the USA according to: • UL 429 (electrically operated valves) and UL 429A (Electrically Operated Valves for Fire Protection Service)
c UL us LISTED SOLENOID FOR USE IN HAZARDOUS LOCATIONS E504714	**Valid for coils: UL Hazardous Locations – Explosion Protection** UL Listed for Hazardous Locations for USA and Canada Class I, Zone 1 Class I, Division 2, Group A, B, C and D Class II + III, Division 2, Group F and G
	Valid for valves: UL Recognized for the USA The valves are UL Recognized for the USA according to: • UL 429 (electrically operated valves) and UL 429A (Electrically Operated Valves for Fire Protection Service)
c us	**Valid for coils: UL Recognized for the USA and Canada** The coils are UL Recognized for the USA and Canada according to: • UL 429 (electrically operated valves) • CAN/CSA-C22.2 No. 61010-1
	Valid for valves: CSA for Canada The valves are CSA approved for Canada according to: • CSA 139 (electrically operated valves)

3.6. Drinking water

Conformity	Description
H_2O	**Suitable for use in drinking water applications** The materials comply with the assessment principles (UBA) for materials in contact with drinking water (TrinkwasserV). PF39: Suitable for products with a maximum temperature of 85 °C (hot water) PF36: Suitable for products with a maximum temperature of 60 °C (warm water)

3.7. Others

DNV GL classification

Approval	Description
TYPE APPROVED PRODUCT DNV DNV.COM/AF	**DNV GL classification – Ships, offshore units, and high speed and light craft** The products are accepted for installation on all vessels classed by DNV GL.

Oxygen

Conformity	Description
O_2	**Optional: Suitability for oxygen (valid for the variable code NL02)** The products are suitable for use with gaseous oxygen, according to the manufacturer's declaration.

DTS 1000152082 EN Version: R Status: RL (released | freigegeben | validé) printed: 18.12.2024

Visit product website ▸

RIEGLER & Co. KG
Schützenstraße 27
72574 Bad Urach
Tel. +49 7125 9497-642
technik@riegler.de

Subject to technical changes and errors reserved.
The proficiency testing is the responsibility of the user.
20.10.2026 The specified data do not represent legally guaranteed properties.

VDE – Certificate of conformity with factory surveillance

Approval	Description
	Optional: Certificate of conformity with factory surveillance (VDE Testing and Certification Institute) (valid for the variable code PW01 and PW02) The electrically operated water valves are tested and certified according to: • DIN EN 60730-1 (VDE 0631-1) • EN 60730-1 • DIN EN IEC 60730-2-8 (VDE 0631-2-8) The electrically operated water valves also fulfill the requirements of: • IEC 60730-1 • IEC 60730-2-8

4. Materials

4.1. Bürkert resistApp



Bürkert resistApp – Chemical resistance chart

You want to ensure the reliability and durability of the materials in your individual application case? Verify your combination of media and materials on our website or in our resistApp.

Start chemical resistance check

4.2. Material specifications

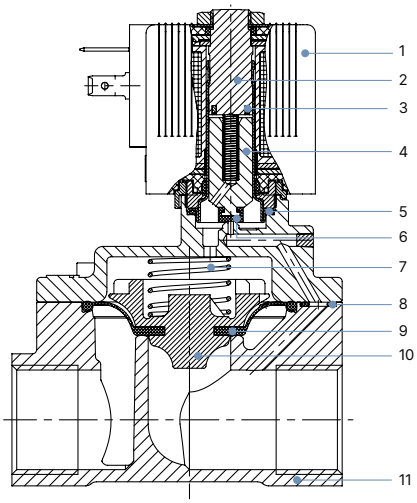

No.	Element	Material
1	Coil	Polyamide [1.] or Epoxy [2.]
2	Stopper	Stainless steel 1.4113
3	Shading ring	Cu (brass version) Ag (stainless steel version)
4	Magnetic core	Stainless steel 1.4113
5	O-rings	NBR, FKM, EPDM
6	Core seal	NBR, FKM, EPDM
7	Spring	Stainless steel 1.4310
8	O-rings	NBR, FKM, EPDM
9	Diaphragm	NBR, FKM, EPDM
10	Diaphragm holder	PPSGF40, DN 50: Brass and stainless steel
11	Valve body	Brass acc. to DIN EN 50930 - 6 or stainless steel 1.4408 (CF8M)

1.) With NBR/EPDM seal
2.) With FKM seal

DTS 1000152082 EN Version: R Status: RL (released | freigegeben | validé) printed: 18.12.2024

RIEGLER & Co. KG
Schützenstraße 27
72574 Bad Urach
Tel. +49 7125 9497-642
technik@riegler.de

Subject to technical changes and errors reserved.
The proficiency testing is the responsibility of the user.
20.10.2026 The specified data do not represent legally guaranteed properties.

5. Dimensions

5.1. Standard version

Note:

- Dimensions in mm
- The dimensions F1 and G1 apply to G-thread.
- The dimensions F2 and G2 apply to NPT-thread.
- The dimensions F3 and G3 apply to Rc-thread.

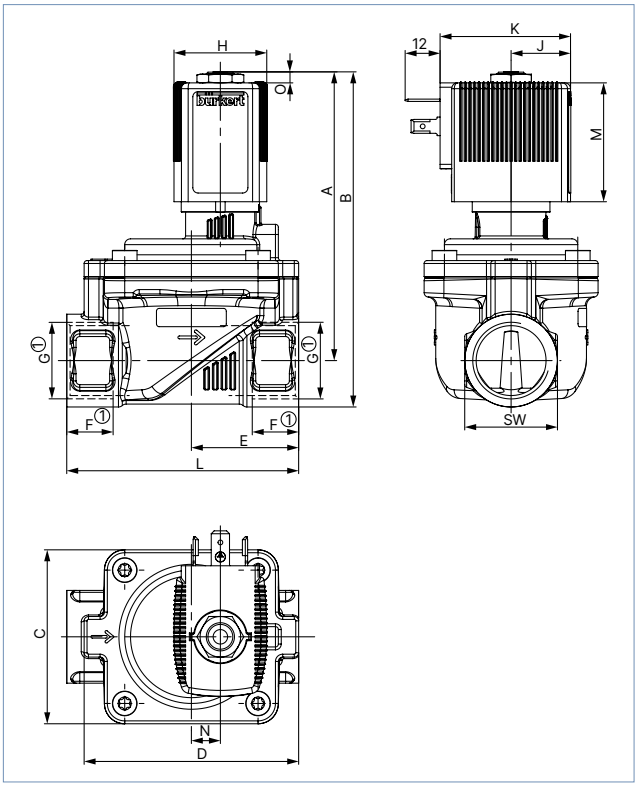

Coil size	H	J	K	M	O
5	32	20.5	45	41	3.4
6	40	23.5	51	41.4	3.8

DN	A	B	C	D	E	G		NPT		Rc		L	SW	N
						F1	G1	F2	G2	F3	G3			
10 [1]	83.1	94.1	32	44	22	12	G ¼	10	NPT ¼	–	–	50	22	–
						12	G ⅜	10.3	NPT ⅜	10.1	Rc ⅜			
	85.1	98.6			24.5	14	G ½	13.7	NPT ½	–	–	50	27	–
10 [2]	83.6	94.6			22	12	G ¼	10	NPT ¼	–	–	50	22	–
						12	G ⅜	10.3	NPT ⅜	10.1	Rc ⅜			
	85.6	99.1			24.5	14	G ½	13.7	NPT ½	–	–	55	27	–
13 [1]	91.1	104.6	42	54.5	27.25	12	G ⅜	–	–	–	–	58	27	–
13					32.5	14	G ½	13.7	NPT ½	13.2	Rc ½	65	27	
	93.1	109.1				16	G ¾	14	NPT ¾	–	–	65	32	
20	99.6	115.6	60	74	37	16	G ¾	14	NPT ¾	14.5	Rc ¾	80	32	10
	102.1	122.6			37.5	18	G 1	16.8	NPT 1	–	–	80	41	
25	106.6	127.1	70	85	46	18	G 1	16.8	NPT 1	16.8	Rc 1	95	41	15
	111.6	136.6				20	G 1¼	17.3	NPT 1¼	19.1	Rc 1¼	95	50	

DTS 1000152082 EN Version: R Status: RL (released | freigegeben | validé) printed: 18.12.2024

RIEGLER & Co. KG
Schützenstraße 27
72574 Bad Urach
Tel. +49 7125 9497-642
technik@riegler.de

Subject to technical changes and errors reserved.
The proficiency testing is the responsibility of the user.
20.10.2026 The specified data do not represent legally guaranteed properties.

DN	A	B	C	D	E	G		NPT		Rc		L	SW	N
						F1	G1	F2	G2	F3	G3			
40 [1)]	120.1	145.1	99	114	61	20	G 1¼	17.3	NPT 1¼	19.1	Rc 1¼	126	50	23
40	125.6	155.6				22	G 1½		NPT 1½		Rc 1½	126	60	
	131.6	166.6			64	24	G 2	17.6	NPT 2	23.4	Rc 2	132	70	
50 [1)]	119.9	154.9	115	132	82	24	G 2	17.6	NPT 2	23.4	Rc 2	164	70	37
	119.6	162.1			89.5	27	G 2½	23.6	NPT 2½	–	–	179	85	

1.) Only threaded brass connection
2.) Only threaded stainless steel connection

DTS 1000152082 EN Version: R Status: RL (released | freigegeben | validé) printed: 18.12.2024

RIEGLER & Co. KG
Schützenstraße 27
72574 Bad Urach
Tel. +49 7125 9497-642
technik@riegler.de

Subject to technical changes and errors reserved.
The proficiency testing is the responsibility of the user.
20.10.2026 The specified data do not represent legally guaranteed properties.

DTS 1000152082 EN Version: R Status: RL (released | freigegeben | validé) printed: 18.12.2024

5.2. ATEX/IECEx cable version

Note:

- Dimensions in mm
- The dimensions F1 and G1 apply to G-thread.
- The dimensions F2 and G2 apply to NPT-thread.
- The dimensions F3 and G3 apply to Rc-thread.
- For DN 50 see dimensions "5.3. ATEX/IECEx terminal box version" on page 10

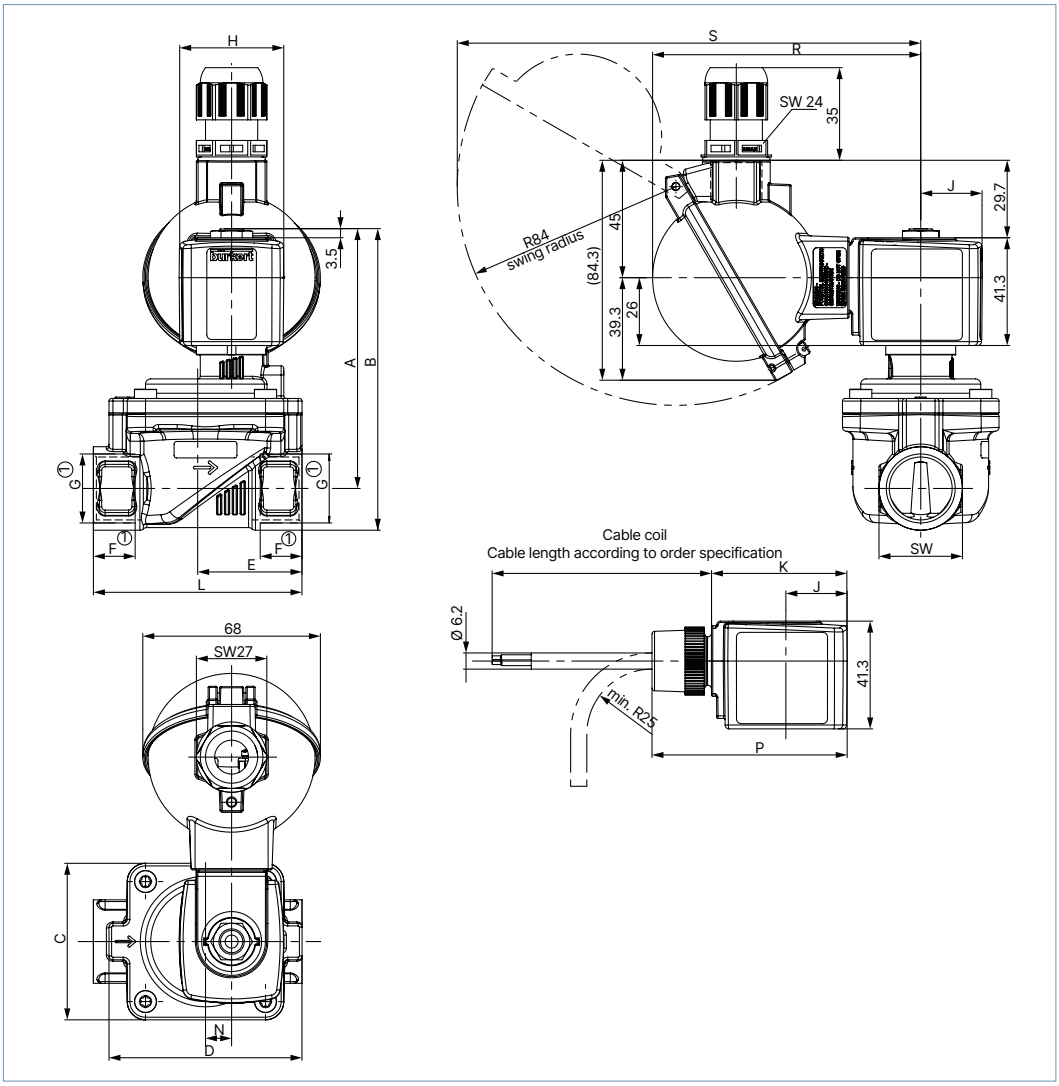

Coil size	H	J	K	P	R	S
5	32	20.5	46	68.8	99.8	174.7
6	40	23.5	52	74.8	103	177.7

RIEGLER & Co. KG
Schützenstraße 27
72574 Bad Urach
Tel. +49 7125 9497-642
technik@riegler.de

Subject to technical changes and errors reserved.
The proficiency testing is the responsibility of the user.
20.10.2026 The specified data do not represent legally guaranteed properties.

DN	A	B	C	D	E	G		NPT		Rc		L	SW	N
						F1	G1	F2	G2	F3	G3			
10 [1]	83.1	94.1	32	44	22	12	G ¼	10	NPT ¼	–	–	50	22	–
						12	G ⅜	10.3	NPT ⅜	10.1	Rc ⅜			
	85.1	98.6			24.5	14	G ½	13.7	NPT ½	–	–	50	27	–
10 [2]	83.6	94.6			22	12	G ¼	10	NPT ¼	–	–	50	22	–
						12	G ⅜	10.3	NPT ⅜	10.1	Rc ⅜			
	85.6	99.1			24.5	14	G ½	13.7	NPT ½	–	–	55	27	–
13 [1]	91.1	104.6	42	54.5	27.25	12	G ⅜	–	–	–	–	58	27	–
13					32.5	14	G ½	13.7	NPT ½	13.2	Rc ½	65	27	
	93.1	109.1				16	G ¾	14	NPT ¾	–	–	65	32	
20	99.6	115.6	60	74	37	16	G ¾	14	NPT ¾	14.5	Rc ¾	80	32	10
	102.1	122.6			37.5	18	G 1	16.8	NPT 1	–	–	80	41	
25	106.6	127.1	70	85	46	18	G 1	16.8	NPT 1	16.8	Rc 1	95	41	15
	111.6	136.6				20	G 1¼	17.3	NPT 1¼	19.1	Rc 1¼	95	50	
40 [1]	120.1	145.1	99	114	61	20	G 1¼	17.3	NPT 1¼	19.1	Rc 1¼	126	50	23
40	125.6	155.6				22	G 1½		NPT 1½		Rc 1½	126	60	
	131.6	166.6			64	24	G 2	17.6	NPT 2	23.4	Rc 2	132	70	
50 [1]	119.9	154.9	115	132	82	24	G 2	17.6	NPT 2	23.4	Rc 2	164	70	37
	119.6	162.1			89.5	27	G 2½	23.6	NPT 2½	–	–	179	85	

1.) Only threaded brass connection
2.) Only threaded stainless steel connection

5.3. ATEX/IECEx terminal box version

Note:

- Dimensions in mm
- Standard at DN 50

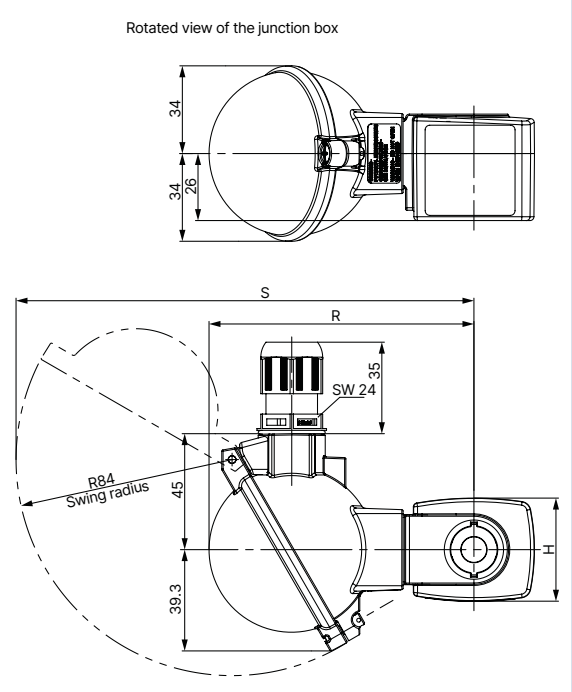

Coil size	H	J	K	P	R	S
5	32	20.5	46	68.8	99.8	174.7
6	40	23.5	52	74.8	103	177.7

DTS 1000152082 EN Version: R Status: RL (released | freigegeben | validé) printed: 18.12.2024

RIEGLER & Co. KG
Schützenstraße 27
72574 Bad Urach
Tel. +49 7125 9497-642
technik@riegler.de

Subject to technical changes and errors reserved.
The proficiency testing is the responsibility of the user.
20.10.2026 The specified data do not represent legally guaranteed properties.

5.4. Compressor relief valves

Note:

- Dimensions in mm
- The dimensions F1 and G1 apply to G-thread.
- The dimensions F2 and G2 apply to NPT-thread.
- The dimensions F3 and G3 apply to Rc-thread.

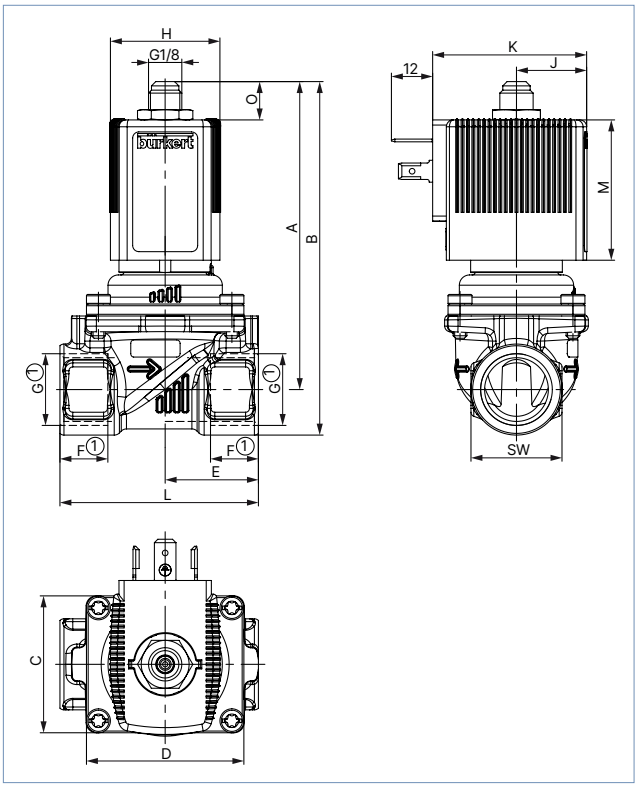

Coil size	H	J	K	M	O
5	32	20.5	46	41	11.2
6	40	23.5	52	41.4	10.8

DN	A	B	C	D	E	G		NPT		Rc		L	SW
						F1	G1	F2	G2	F3	G3		
10	90.5	101.5	32	44	22	12	G ¼	10	NPT ¼	–	–	50	22
						12	G ⅜	10.3	NPT ⅜	10.1	Rc ⅜		
	92.5	106			24.5	14	G ½	13.7	NPT ½	13.2	Rc ½		27
13	90	103.5	42	54.5	27.25	12	G ⅜	–	–	–	–	58	27
						14	G ½	13.7	NPT ½	13.2	Rc ½		
	92	108			32.5	16	G ¾	14	NPT ¾	14.5	Rc ¾	65	32
20	107	123	60	74	37	16	G ¾	14	NPT ¾	14.5	Rc ¾	80	32
	109.5	130			37.5	18	G 1	16.8	NPT 1	–	–		41

DTS 1000152082 EN Version: R Status: RL (released | freigegeben | validé) printed: 18.12.2024

Visit product website ▸

RIEGLER & Co. KG
Schützenstraße 27
72574 Bad Urach
Tel. +49 7125 9497-642
technik@riegler.de

Subject to technical changes and errors reserved.
The proficiency testing is the responsibility of the user.
20.10.2026 The specified data do not represent legally guaranteed properties.

6. Performance specifications

6.1. Power consumption

Circuit function	Orifice	Coil size	AC			DC		ATEX AC/DC
			Inrush power	Holding power		Cold	Hot	Nominal power
	[mm]	[mm]	[VA]	[VA]	[W]	[W]	[W]	[W]
A	10...50	32	24	14	8	9.5	8	–
A	10...50	32	24	16	7	9.5	8	–
A / B	13...50	40	–	–	–	–	–	9
A	10	32	–	–	–	–	–	7
B	10	40	–	–	–	–	–	9
B u. CF05	10	32	18	11	5	6	5	–
B u. MX62	13	32	24	14	8	–	–	–
B u. MX62	13	40	–	–	–	11	9.5	–

6.2. Power consumption Kick and Drop coil

Circuit function	Orifice	Coil size	Voltage	Inrush power (approx. 500 ms)		Holding power
	[mm]	[mm]	[V]	[VA]	[W]	[W]
A	10...50	40	024/UC	–	12	0.6
A	10...50	40	230/56	20	–	2
B	10...50	40	024/UC	–	20	2
B	10...50	40	230/56	20	–	2

7. Product accessories

7.1. Cable glands for ATEX/IECEx terminal box

Note:
A polyamide cable gland is included in the scope of delivery. A nickel-plated brass version can be ordered for a surcharge, see "Cable glands for ATEX/IECEx terminal box" on page 21.

Description	Ex approvals		Dimensions	
	Certification	Identification		
Ex cable gland, Nickel-plated brass, 6...13 mm 	PTB 04 ATEX 1112 X, IECEx PTB 13.0027X	II 2 G Ex e IIC Gb, II 2 D Ex tb IIIC Db IP68	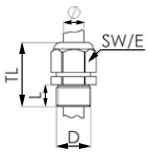	TL 29...37 mm L 6 mm D 20 mm SW 24 mm E 27 mm
Ex cable gland, Polyamide, 7...13 mm 	PTB 13 ATEX 1015 X, IECEx PTB 13.0034X	II 2 G Ex e IIC Gb, II 2 D Ex tb IIIC Db IP68	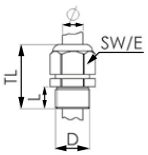	TL 36...45 mm L 10 mm D 20 mm SW 24 mm E 28 mm

RIEGLER & Co. KG
Schützenstraße 27
72574 Bad Urach
Tel. +49 7125 9497-642
technik@riegler.de

Subject to technical changes and errors reserved.
The proficiency testing is the responsibility of the user.
20.10.2026 The specified data do not represent legally guaranteed properties.

DTS 1000152082 EN Version: R Status: RL (released | freigegeben | validé) printed: 18.12.2024

7.2. Special tool to turn the terminal box

Note:
This special tool is not included in the scope of delivery of the valve, see "Cable glands for ATEX/IECEx terminal box" on page 21.

Description	Components of the set
Set SC02-AC10 	• Special wrench • Service manual

8. Ordering information

8.1. Bürkert eShop



Bürkert eShop – Easy ordering and quick delivery

You want to find your desired Bürkert product or spare part quickly and order directly? Our online shop is available for you 24/7. Sign up and enjoy all the benefits.

Order online now

8.2. Bürkert product filter



Bürkert product filter – Get quickly to the right product

You want to select products comfortably based on your technical requirements?
Use the Bürkert product filter and find suitable articles for your application quickly and easily.

Try out our product filter

8.3. Bürkert Product Enquiry Form

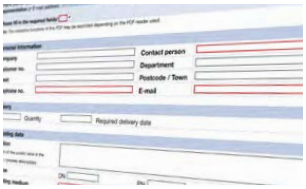

Bürkert Product Enquiry Form – Your enquiry quickly and compactly

Would you like to make a specific product enquiry based on your technical requirements? Use our Product Enquiry Form for this purpose. There you will find all the relevant information for your Bürkert contact. This will enable us to provide you with the best possible advice.

Fill out the form now

DTS 1000152082 EN Version: R Status: RL (released | freigegeben | validé) printed: 18.12.2024

RIEGLER & Co. KG
Schützenstraße 27
72574 Bad Urach
Tel. +49 7125 9497-642
technik@riegler.de

Subject to technical changes and errors reserved.
The proficiency testing is the responsibility of the user.
20.10.2026 The specified data do not represent legally guaranteed properties.

8.4. Ordering chart

Standard version with brass body

Circuit function A

Note:
Please note that the cable plug must be ordered separately, see "8.5. Ordering chart accessories" on page 20 or separate data sheet for **Type 2518**.

Circuit function	Port connection	Orifice	K_V value water[1) 2)]	Pressure range[3)]	Weight	Article no.		
						024/DC	024/50...60	230/50...60
		[mm]	[m³/h]	[bar]	[kg]	[V/Hz]	[V/Hz]	[V/Hz]
Seal material NBR, polyamide coil, medium temperature -10 °C...+80 °C								
CF A 2/2-way solenoid valve Servo-controlled Normally closed 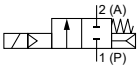 	G ¼	10	1.5	0.2...16	0.43	322499	322500	322501
	G ⅜	10	1.9	0.2...16	0.40	322502	322503	322504
	G ⅜	13	3.8	0.2...16	0.58	221841	221842	221843
	G ½	13	3.8	0.2...16	0.54	221844	221845	221846
	G ¾	13	3.8	0.2...16	0.59	221847	221848	221849
	G ¾	20	8.5	0.2...16	0.89	221850	221851	221852
	G 1	20	8.5	0.2...16	1.0	221853	221854	221855
	G 1	25	12	0.2...16	1.3	221856	221857	221858
	G 1¼	25	12	0.2...16	1.5	221859	221860	221861
	G 1¼	40	23	0.2...16	2.7	270131	268550	270132
	G 1½	40	30	0.2...16	3.0	221862	221863	221864
	G 2	40	30	0.2...16	3.2	221865	221866	221867
	G 2	50	40	0.2...16	4.5	253156	253157	253158
	G 2½	50	40	0.2...16	5.2	253159	253160	253161
Seal material NBR, polyamide coil, medium temperature -10 °C...+80 °C, with manual override								
CF A 2/2-way solenoid valve Servo-controlled Normally closed 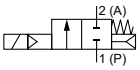 	G ¼	10	1.5	0.2...16	0.43	322505	322506	322507
	G ⅜	10	1.9	0.2...16	0.40	322508	322509	322510
	G ½	13	3.8	0.2...16	0.54	221952	o. r.	221953
	G ¾	13	3.8	0.2...16	0.59	221954	o. r.	221955
	G ¾	20	8.5	0.2...16	0.89	221956	o. r.	221957
	G 1	20	8.5	0.2...16	1.0	221958	o. r.	221959
	G 1	25	12	0.2...16	1.3	221960	o. r.	221961
	G 1¼	25	12	0.2...16	1.5	221962	o. r.	221963
	G 1¼	40	23	0.2...16	2.7	270142	o. r.	270143
	G 1½	40	30	0.2...16	3.0	221964	o. r.	221965
	G 2	40	30	0.2...16	3.2	221966	o. r.	221967
Seal material FKM, epoxy coil, medium temperature 0 °C...+120 °C								
CF A 2/2-way solenoid valve Servo-controlled Normally closed 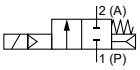 	G ¼	10	1.5	0.2...16	0.43	322511	322512	322513
	G ⅜	10	1.9	0.2...16	0.40	322514	322515	322516
	G ⅜	13	3.8	0.2...16	0.58	221868	221869	221870
	G ½	13	3.8	0.2...16	0.54	221871	221872	221873
	G ¾	13	3.8	0.2...16	0.59	221874	221875	221876
	G ¾	20	8.5	0.2...16	0.89	221877	221878	221879
	G 1	20	8.5	0.2...16	1.0	221880	221881	221882
	G 1	25	12	0.2...16	1.3	221883	221884	221885
	G 1¼	25	12	0.2...16	1.5	221886	221887	221888
	G 1¼	40	23	0.2...16	2.7	270133	270134	270135
	G 1½	40	30	0.2...16	3.0	221889	221890	221891
	G 2	40	30	0.2...16	3.2	221892	221893	221894
	G 2	50	40	0.2...16	4.5	253168	253169	253170
	G 2½	50	40	0.2...16	5.2	253171	253172	253173

DTS 1000152082 EN Version: R Status: RL (released | freigegeben | validé) printed: 18.12.2024

Visit product website

RIEGLER & Co. KG
Schützenstraße 27
72574 Bad Urach
Tel. +49 7125 9497-642
technik@riegler.de

Subject to technical changes and errors reserved.
The proficiency testing is the responsibility of the user.
20.10.2026 The specified data do not represent legally guaranteed properties.

Circuit function	Port connection	Orifice	K_V value water[1) 2)]	Pressure range[3)]	Weight	Article no.		
						024/DC	024/50...60	230/50...60
		[mm]	[m³/h]	[bar]	[kg]	[V/Hz]	[V/Hz]	[V/Hz]
Seal material EPDM, polyamide coil, medium temperature -30 °C...+90 °C								
CF A 2/2-way solenoid valve Servo-controlled Normally closed 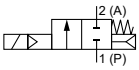 	G ¼	10	1.5	0.2...16	0.43	322517	322518	322519
	G ⅜	10	1.9	0.2...16	0.40	322520	322521	322522
	G ⅜	13	3.8	0.2...16	0.58	221895	221896	221897
	G ½	13	3.8	0.2...16	0.54	221898	221899	221900
	G ¾	13	3.8	0.2...16	0.59	221901	221902	221903
	G ¾	20	8.5	0.2...16	0.89	221904	221905	221906
	G 1	20	8.5	0.2...16	1.0	221907	221908	221909
	G 1	25	12	0.2...16	1.3	221910	221911	221912
	G 1¼	25	12	0.2...16	1.5	221913	221914	221915
	G 1¼	40	23	0.2...16	2.7	270136	270137	270138
	G 1½	40	30	0.2...16	3.0	221916	221917	221918
	G 2	40	30	0.2...16	3.2	221919	221920	221921
	G 2	50 [4)]	40	0.2...16	4.5	253162	253163	253164
	G 2½	50 [4)]	40	0.2...16	5.2	253165	253166	253167

o. r. = on request
1.) Measurement at + 20 °C, 1 bar at the valve inlet and free outlet
2.) A pressure difference of 0.5 bar is required to open the full cross-section.
3.) Pressure data: overpressure to atmospheric pressure
4.) Approved for drinking water according to KTW and W270

Circuit function B

Note:
Please note that the cable plug must be ordered separately, see "8.5. Ordering chart accessories" on page 20 or separate data sheet for **Type 2518** ▶.

Circuit function	Port connection	Orifice	K_V value water[1) 2)]	Pressure range[3)]	Weight	Article no.		
						024/DC	024/50	230/50
		[mm]	[m³/h]	[bar]	[kg]	[V/Hz]	[V/Hz]	[V/Hz]
Seal material NBR, epoxy coil, medium temperature -10 °C...+80 °C								
CF B 2/2-way solenoid valve Servo-controlled Normally open 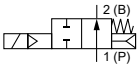 	G ¼	10	1.5	0.2...16	0.43	322523	322524	322525
	G ⅜	10	1.9	0.2...16	0.40	322526	322527	322528
	G ⅜	13	3.8	0.2...16	0.58	221923	221924	221925
	G ½	13	3.8	0.2...16	0.54	221926	221928	221929
	G ¾	13	3.8	0.2...16	0.59	221930	221931	221933
	G ¾	20	8.5	0.2...16	0.89	221934	221935	221936
	G 1	20	8.5	0.2...16	1.0	221937	221938	221939
	G 1	25	12	0.2...16	1.3	221940	221941	221942
	G 1¼	25	12	0.2...16	1.5	221943	221944	221945
	G 1¼	40	23	0.2...16	2.7	270139	270140	270141
	G 1½	40	30	0.2...16	3.0	221946	221947	221948
	G 2	40	30	0.2...16	3.2	221949	221950	221951
	G 2	50	40	0.2...16	4.5	253174	253175	253176
	G 2½	50	40	0.2...16	5.2	253177	253178	253179

1.) Measurement at + 20 °C, 1 bar at the valve inlet and free outlet
2.) A pressure difference of 0.5 bar is required to open the full cross-section.
3.) Pressure data: overpressure to atmospheric pressure

DTS 1000152082 EN Version: R Status: RL (released | freigegeben | validé) printed: 18.12.2024

RIEGLER & Co. KG
Schützenstraße 27
72574 Bad Urach
Tel. +49 7125 9497-642
technik@riegler.de

Subject to technical changes and errors reserved.
The proficiency testing is the responsibility of the user.
20.10.2026 The specified data do not represent legally guaranteed properties.

Circuit function A, with Kick and Drop coil

Note:

- Please note that the cable plug must be ordered separately, see "8.5. Ordering chart accessories" on page 20 or separate data sheet for **Type 2518**.
- The Kick and Drop coil (AC/DC) features integrated electronics for short-term power increase and decrease in double coil t echnology.

Circuit function	Port connection	Orifice	K_v value water[1) 2)]	Pressure range[3)]	Weight	Article no.	
						024 / AC/DC	230 / 50...60
		[mm]	[m³/h]	[bar]	[kg]	[V/Hz]	[V/Hz]
Seal material FKM, epoxy coil, medium temperature 0 °C...+ 120 °C							
CF A 2/2-way solenoid valve Servo-controlled Normally closed 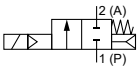 	G ¼	10	1.5	0.2...16	0.43	20046906	20046961
	G ⅜	10	1.9	0.2...16	0.40	20046907	20046960
	G ½	13	3.8	0.2...16	0.54	20046908	20046963
	G ¾	20	8.5	0.2...16	0.89	20046909	20046964
	G 1	25	12	0.2...16	1.3	20046910	20046965
	G 1¼	40	23	0.2...16	2.7	20046911	20046966
	G 1½	40	30	0.2...16	3.0	20046912	20046967
	G 2	50	40	0.2...16	4.5	20046913	20046968
	G 2½	50	40	0.2...16	5.2	20046914	20046969

1.) Measurement at + 20 °C, 1 bar at the valve inlet and free outlet
2.) A pressure difference of 0.5 bar is required to open the full cross-section.
3.) Pressure data: overpressure to atmospheric pressure

Circuit function B, with Kick and Drop coil

Note:

- Please note that the cable plug must be ordered separately, see "8.5. Ordering chart accessories" on page 20 or separate data sheet for **Type 2518**.
- The Kick and Drop coil (AC/DC) features integrated electronics for short-term power increase and decrease in double coil t echnology.

Circuit function	Port connection	Orifice	K_v value water[1) 2)]	Pressure range[3)]	Weight	Article no.	
						024 / AC/DC	230 / 50...60
		[mm]	[m³/h]	[bar]	[kg]	[V/Hz]	[V/Hz]
Seal material FKM, epoxy coil, medium temperature 0 °C...+ 120 °C							
CF B 2/2-way solenoid valve Servo-controlled Normally open 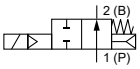 	G ¼	10	1.5	0.2...16	0.43	20046924	20046970
	G ⅜	10	1.9	0.2...16	0.40	20046925	20046971
	G ½	13	3.8	0.2...16	0.54	20046927	20046972
	G ¾	20	8.5	0.2...16	0.89	20046928	20046973
	G 1	25	12	0.2...16	1.3	20046929	20046974
	G 1¼	40	23	0.2...16	2.7	20046930	20046975
	G 1½	40	30	0.2...16	3.0	20046931	20046976
	G 2	50	40	0.2...16	4.5	20046932	20046978
	G 2½	50	40	0.2...16	5.2	20046933	20046979

1.) Measurement at + 20 °C, 1 bar at the valve inlet and free outlet
2.) A pressure difference of 0.5 bar is required to open the full cross-section.
3.) Pressure data: overpressure to atmospheric pressure

DTS 1000152082 EN Version: R Status: RL (released | freigegeben | validé) printed: 18.12.2024

RIEGLER & Co. KG
Schützenstraße 27
72574 Bad Urach
Tel. +49 7125 9497-642
technik@riegler.de

Subject to technical changes and errors reserved.
The proficiency testing is the responsibility of the user.
20.10.2026 The specified data do not represent legally guaranteed properties.

Standard version with stainless steel body

Circuit function A

Note:
Please note that the cable plug must be ordered separately, see "8.5. Ordering chart accessories" on page 20 or separate data sheet for **Type 2518**.

Circuit function	Port connection	Orifice	K_v value water[1) 2)]	Pressure range[3)]	Weight	Article no.		
						024/DC	024/50...60	230/50...60
		[mm]	[m³/h]	[bar]	[kg]	[V/Hz]	[V/Hz]	[V/Hz]
Seal material NBR, polyamide coil, medium temperature -10 °C...+80 °C								
CF A 2/2-way solenoid valve Servo-controlled Normally closed 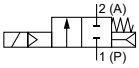 	G ¼	10	1.5	0.2...16	0.43	322529	322530	322531
	G ⅜	10	1.9	0.2...16	0.40	322532	322533	322534
	G ½	13	3.8	0.2...16	0.54	221968	221969	221970
	G ¾	20	8.5	0.2...16	0.86	221971	221972	221973
	G 1	20	8.5	0.2...16	0.97	221974	221975	221976
	G 1	25	12	0.2...16	1.3	221977	221978	221979
	G 1¼	25	12	0.2...16	1.4	221980	221981	221982
	G 1½	40	30	0.2...16	2.8	221983	221984	221985
	G 2	40	30	0.2...16	3.0	221986	221987	221988
Seal material FKM, epoxy coil, medium temperature 0 °C...+120 °C								
CF A 2/2-way solenoid valve Servo-controlled Normally closed 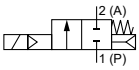 	G ¼	10	1.5	0.2...16	0.43	322535	322536	322537
	G ⅜	10	1.9	0.2...16	0.40	322538	322539	322540
	G ½	13	3.8	0.2...16	0.54	221989	221990	221991
	G ¾	20	8.5	0.2...16	0.86	221992	221993	221994
	G 1	20	8.5	0.2...16	0.97	221995	221996	221997
	G 1	25	12	0.2...16	1.3	221998	221999	222000
	G 1¼	25	12	0.2...16	1.4	222001	222002	222003
	G 1½	40	30	0.2...16	2.8	222004	222005	222006
	G 2	40	30	0.2...16	3.0	222007	222008	222009
Seal material FKM, epoxy coil, medium temperature 0 °C...+120 °C, with manual override								
CF A 2/2-way solenoid valve Servo-controlled Normally closed 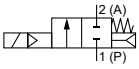 	G ¼	10	1.5	0.2...16	0.43	323894	o. r.	323968
	G ⅜	10	1.9	0.2...16	0.40	323971	o. r.	323972
	G ½	13	3.8	0.2...16	0.54	323973	o. r.	323975
	G ¾	20	8.5	0.2...16	0.86	323977	o. r.	323978
	G 1	25	12	0.2...16	1.3	323979	o. r.	323980
	G 1¼	25	1.4	0.2...16	1.4	323982	o. r.	323984
	G 1½	40	30	0.2...16	2.8	323986	o. r.	323987
	G 2	40	30	0.2...16	3.0	323988	o. r.	323989
Seal material EPDM, polyamide coil, medium temperature -30 °C...+90 °C								
CF A 2/2-way solenoid valve Servo-controlled Normally closed 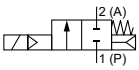 	G ¼	10	1.5	0.2...16	0.43	322541	322542	322543
	G ⅜	10	1.9	0.2...16	0.40	322544	322545	322546
	G ½	13	3.8	0.2...16	0.54	222010	222011	222012
	G ¾	20	8.5	0.2...16	0.86	222013	222014	222015
	G 1	20	8.5	0.2...16	0.97	222016	222017	222018
	G 1	25	12	0.2...16	1.3	222019	222020	222021
	G 1¼	25	12	0.2...16	1.4	222022	222023	222024
	G 1½	40	30	0.2...16	2.8	222025	222026	222027
	G 2	40	30	0.2...16	3.0	222028	222029	222031

o. r. = on request
1.) Measurement at + 20 °C, 1 bar at the valve inlet and free outlet
2.) A pressure difference of 0.5 bar is required to open the full cross-section.
3.) Pressure data: overpressure to atmospheric pressure

Visit product website

DTS 1000152082 EN Version: R Status: RL (released | freigegeben | validé) printed: 18.12.2024

RIEGLER & Co. KG
Schützenstraße 27
72574 Bad Urach
Tel. +49 7125 9497-642
technik@riegler.de

Subject to technical changes and errors reserved.
The proficiency testing is the responsibility of the user.
20.10.2026 The specified data do not represent legally guaranteed properties.

Circuit function B

Note:
Please note that the cable plug must be ordered separately, see "8.5. Ordering chart accessories" on page 20 or separate data sheet for **Type 2518**.

Circuit function	Port connection	Orifice	K_v value water[1) 2)]	Pressure range[3)]	Weight	Article no.		
						024/DC	024/50	230/50
		[mm]	[m³/h]	[bar]	[kg]	[V/Hz]	[V/Hz]	[V/Hz]
Seal material FKM, epoxy coil, medium temperature 0 °C...+120 °C								
CF B 2/2-way solenoid valve Servo-controlled Normally open 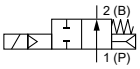 	G ¼	10	1.5	0.2...16	0.43	322547	322548	322549
	G ⅜	10	1.9	0.2...16	0.40	322550	322551	322552
	G ½	13	3.8	0.2...16	0.54	228387	228388	228389
	G ¾	20	8.5	0.2...16	0.86	228390	228391	228392
	G 1	25	12	0.2...16	1.3	228393	228394	228395
	G 1¼	25	12	0.2...16	1.4	228396	228397	228398
	G 1½	40	30	0.2...16	2.8	228399	228400	228401
	G 2	40	30	0.2...16	3.0	228402	228403	228404

1.) Measurement at + 20 °C, 1 bar at the valve inlet and free outlet
2.) A pressure difference of 0.5 bar is required to open the full cross-section.
3.) Pressure data: overpressure to atmospheric pressure

ATEX/IECEx cable version

Note:

- The maximum medium temperature must never exceed the permitted temperature class (T4: + 135 °C, T5: + 100 °C, T6: + 85 °C) minus 5 K.
- Delivery includes 3 metre cable.
- Refer to chapter "3. Approvals and conformities" on page 4 for more information about the approvals.

Circuit function	Port connection	Orifice	K_v value water[1) 2)]	Pressure range[3)]	Weight	Article no.	
						024 / AC/DC	230 / AC/DC
		[mm]	[m³/h]	[bar]	[kg]	[V/Hz]	[V/Hz]
Seal material NBR, brass body, medium temperature -10 °C...+80 °C							
CF A 2/2-way solenoid valve Servo-controlled Normally closed 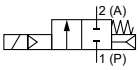 	G ¼	10	1.5	0.2...16	0.62	349656	349658
	G ⅜	10	1.9	0.2...16	0.59	349660	349662
	G ½	13	3.8	0.2...16	0.84	349690	349696
	G ¾	20	8.5	0.2...16	1.2	349717	349719
	G 1	25	12	0.2...16	1.7	349731	349734
	G 1¼	25	12	0.2...16	1.8	349737	349739
	G 1¼	40	23	0.2...16	3.0	349751	349754
	G 1½	40	30	0.2...16	3.3	349756	349758
	G 2	40	30	0.2...16	3.5	349760	349762
	G 2	50	40	0.2...16	4.8	349773	349775
	G 2½	50	40	0.2...16	5.5	349777	349778
Seal material FKM, stainless steel body, medium temperature 0 °C...+90 °C							
CF A 2/2-way solenoid valve Servo-controlled Normally closed 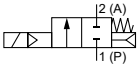 	G ¼	10	1.5	0.2...16	0.62	349665	349666
	G ⅜	10	1.9	0.2...16	0.59	349669	349670
	G ½	13	3.8	0.2...16	0.84	349707	349708
	G ¾	20	8.5	0.2...16	1.2	349724	349727
	G 1	25	12	0.2...16	1.6	349742	349744
	G 1¼	25	12	0.2...16	1.7	349747	349750
	G 1½	40	30	0.2...16	3.1	349765	349767
	G 2	40	30	0.2...16	3.3	349770	349771

1.) Measurement at + 20 °C, 1 bar at the valve inlet and free outlet
2.) A pressure difference of 0.5 bar is required to open the full cross-section.
3.) Pressure data: overpressure to atmospheric pressure

Visit product website

DTS 1000152082 EN Version: R Status: RL (released | freigegeben | validé) printed: 18.12.2024

RIEGLER & Co. KG
Schützenstraße 27
72574 Bad Urach
Tel. +49 7125 9497-642
technik@riegler.de

Subject to technical changes and errors reserved.
The proficiency testing is the responsibility of the user.
20.10.2026 The specified data do not represent legally guaranteed properties.

ATEX/IECEx terminal box version

Note:

- The maximum medium temperature must never exceed the permitted temperature class (T4: + 135 °C, T5: + 100 °C, T6: + 85 °C) minus 5 K.
- Refer to chapter "3. Approvals and conformities" on page 4 for more information about the approvals.

Circuit function	Port connection	Orifice	K_v value water[1) 2)]	Pressure range[3)]	Weight	Article no.	
						024 / AC/DC	230 / AC/DC
		[mm]	[m³/h]	[bar]	[kg]	[V/Hz]	[V/Hz]
Seal material NBR, brass body, medium temperature -10 °C...+ 80 °C							
CF A 2/2-way solenoid valve Servo-controlled Normally closed 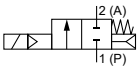	G ¼	10	1.5	0.2...16	0.62	349657	349659
	G ⅜	10	1.9	0.2...16	0.59	349661	349663
	G ½	13	3.8	0.2...16	0.84	349691	349697
	G ¾	20	8.5	0.2...16	1.2	349718	349720
	G 1	25	12	0.2...16	1.7	349733	349735
	G 1¼	25	12	0.2...16	1.8	349738	349740
	G 1¼	40	23	0.2...16	3.0	349753	349755
	G 1½	40	30	0.2...16	3.3	349757	349759
	G 2	40	30	0.2...16	3.5	349761	349763
	G 2	50	40	0.2...16	4.8	349774	349776
Seal material FKM, stainless steel body, medium temperature 0 °C...+ 90 °C							
CF A 2/2-way solenoid valve Servo-controlled Normally closed 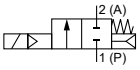	G ¼	10	1.5	0.2...16	0.62	349664	349667
	G ⅜	10	1.9	0.2...16	0.59	349668	349671
	G ½	13	3.8	0.2...16	0.84	349705	349709
	G ¾	20	8.5	0.2...16	1.2	349725	349728
	G 1	25	12	0.2...16	1.6	349743	349745
	G 1¼	25	12	0.2...16	1.7	349748	349749
	G 1½	40	30	0.2...16	3.1	349766	349768
	G 2	40	30	0.2...16	3.3	349769	349772

1.) Measurement at + 20 °C, 1 bar at the valve inlet and free outlet
2.) A pressure difference of 0.5 bar is required to open the full cross-section.
3.) Pressure data: overpressure to atmospheric pressure

DTS 1000152082 EN Version: R Status: RL (released | freigegeben | validé) printed: 18.12.2024

Visit product website ▸

RIEGLER & Co. KG
Schützenstraße 27
72574 Bad Urach
Tel. +49 7125 9497-642
technik@riegler.de

Subject to technical changes and errors reserved.
The proficiency testing is the responsibility of the user.
20.10.2026 The specified data do not represent legally guaranteed properties.

Compressor relief valve with brass body

Note:

- Please note that the cable plug must be ordered separately, see "8.5. Ordering chart accessories" on page 20 or separate data sheet for **Type 2518** ▶.
- The valve is open in the rest position. The medium also flows via the exhaust port on the solenoid.

Circuit function	Port connection	Orifice	K_V value water[1.) 2.)]	Pressure range[3.)]	Weight	Article no.			
						024/DC	024/50...60	110/50...60	230/50...60
		[mm]	[m³/h]	[bar]	[kg]	[V/Hz]	[V/Hz]	[V/Hz]	[V/Hz]
Seal material FKM, polyamide coil, medium temperature 0 °C...+ 90 °C, DN 10									
CF B 2/2-way solenoid valve Servo-controlled Normally open 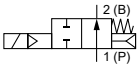	G ⅜	10	1.9	0.2...16	0.43	330985	330986	330987	330988
	G ½	10	1.9	0.2...16	0.40	330989	331007	331008	331009
Seal material FKM, polyamide coil, medium temperature 0 °C...+ 90 °C, DN 13									
CF B 2/2-way solenoid valve Servo-controlled Normally open 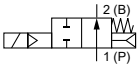	G ⅜	13	3.6	0.5...16	0.58	310663	310662	310661	310659
	G ½	13	3.6	0.5...16	0.54	310667	310666	310665	310664

1.) Measurement at + 20 °C, 1 bar at the valve inlet and free outlet
2.) A pressure difference of 0.5 bar is required to open the full cross-section.
3.) Pressure data: overpressure to atmospheric pressure

Further versions on request

Material
Brass dezincification resistant

Temperature
- EPDM version up to + 100 °C with epoxy coil
- FKM version up to + 120 °C with epoxy coil

Process connection
NPT, Rc

Approval
Further information can be found in chapter "3. Approvals and conformities" on page 4.

Voltage
Further voltages

8.5. Ordering chart accessories

Cable plug Type 2518, form A according to DIN EN 175301 - 803

Note:
For further versions see data sheet **Type 2518** ▶.

Cable plug	Dimensions	Version	Voltage	Article no.
	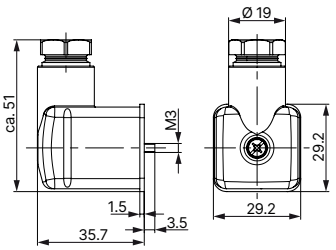	Without circuitry (AC/DC)	0...250 V AC/DC	314802
		With LED (AC/DC)	12...24 V AC/DC	314812
		With LED and varistor (AC/DC)	12...24 V AC/DC	314820
		With rectifier, LED and varistor	12...24 V AC/DC	314816
		Without circuitry (AC/DC) with silicone seal for higher ambient temperature, e.g. steam version (NA07)	0...250 V AC/DC	361687

Visit product website ▶

DTS 1000152082 EN Version: R Status: RL (released | freigegeben | validé) printed: 18.12.2024

RIEGLER & Co. KG
Schützenstraße 27
72574 Bad Urach
Tel. +49 7125 9497-642
technik@riegler.de

Subject to technical changes and errors reserved.
The proficiency testing is the responsibility of the user.
20.10.2026 The specified data do not represent legally guaranteed properties.

Cable plug Type 2509, form A according to DIN EN 175301 - 803

Note:

- Without circuitry (standard)
- Refer to data sheet **Type 2509** ▸ for more information about the cable plug.

Cable plug	Dimensions	Version	Voltage	Article no.
	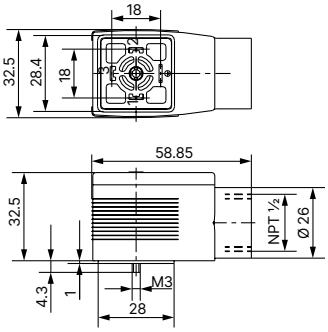	Without circuitry	0...250 V AC/DC	137943

Cable glands for ATEX/IECEx terminal box

Note:

- A cable gland in polyamide version is included in the delivery. A nickel-plated brass version can be ordered at surcharge.
- Refer to "7.1. Cable glands for ATEX/IECEx terminal box" on page 12 for more information about Ex cable glands.
- Refer to "7.2. Special tool to turn the terminal box" on page 13 for more information about Special wrench.

Description	Article no.
Ex cable gland, nickel-plated brass, 6...13 mm [1]	773278
Ex cable gland, polyamide, 7...13 mm [1]	773277
Set SC02-AC10: special wrench [2] incl. service manual	293488

1.) Cable diameter
2.) Not included in the scope of delivery of the valve

Mounting set for DN 10

Cable plug	Dimensions	Description	Article no.
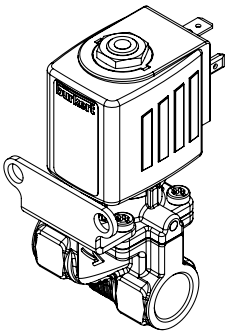	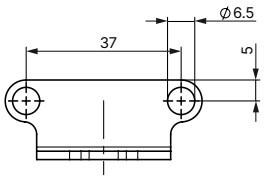	Mounting bracket kit (consisting of mounting bracket and screws)	365730

Visit product website ▸

DTS 1000152082 EN Version: R Status: RL (released | freigegeben | validé) printed: 18.12.2024

RIEGLER & Co. KG
Schützenstraße 27
72574 Bad Urach
Tel. +49 7125 9497-642
technik@riegler.de

Subject to technical changes and errors reserved.
The proficiency testing is the responsibility of the user.
20.10.2026 The specified data do not represent legally guaranteed properties.