3/2-5/2-way valve

with NAMUR style interface

MAX

Art. No. **103648**

Type No. **551.02**



Exemplary illustration

Pilot-operated 3/2 and 5/2-way spool valves with threaded port connections and a NAMUR style interface. The two conversion plates supplied with each valve allow the device to be adapted to a 3/2-way or 5/2-way function.

The valve is turned on by a continuous signal. Turning off causes the piston to be returned to its initial position under pressure. Includes a manual operator as standard.

Technical data

Operation	electropneumatic
Function	3/2-5/2
Port 1	G 1/4 IT
Port 3	G 1/8 IT
Port 5	G 1/8 IT
Voltage	24 V DC
Electrical connection	connector socket, form B according to DIN EN 175301-803
Exhaust port	suitable for M5 connection
DN	6 mm
Flow rate measurement	at 6 bar
Flow rate	700 l/min
Medium	filtered compressed air with or without lubrication. If lubricated, then continuous. Neutral gases.
Operating pressure	2 - 10 bar
Protection IP	IP 65
Insulation class	F
Operating temperature	-25 to 60 °C
Ambient temperature	-25 to 60 °C
Housing	anodised aluminium, black
Sealant	NBR, PUR
Adapter pieces	glass fibre reinforced polyamide (PA+GF)
End pieces	glass fiber reinforced polyamide (PA+GF)

RIEGLER & Co. KG
Schützenstraße 27
72574 Bad Urach
Tel. +49 7125 9497-642
technik@riegler.de

Subject to technical changes and errors reserved.
The proficiency testing is the responsibility of the user.
18.11.2026 The specified data do not represent legally guaranteed properties.

Technical data

Internal parts	die-cast zinc, steel, acetal (POM), aluminum
Armature of magnet	stainless steel
Guide tube	stainless steel
Shading ring	copper
Manual override	latching

Commercial data

Customs tariff number	84812090
Country of origin	PL
eCl@ss 5.1.4	27291501
eCl@ss 9.0	27291390
UNSPSC_Code_v190501	40141603
UNSPSC_CodeDesc_v190501	Pneumatic valves

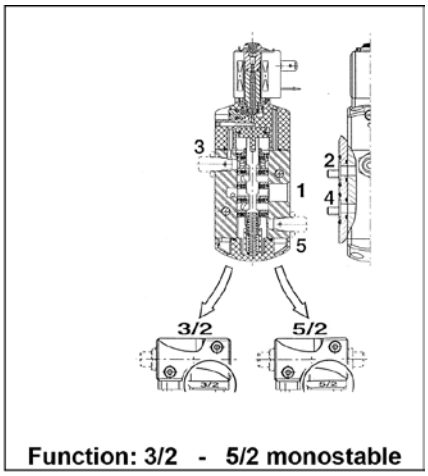

Function: 3/2 - 5/2 monostable

Electrical data

Voltages (2) DC (=) 24 V 12 V
AC (~) 24 V 115 V 230 V/50 Hz

Coil type	Power				Ambient temperature (3)	Degree of protection
	Pickup ~	Holding ~		Hot/cold =		
	(VA)	(VA)	(W)	(W)	(°C)	
CM22-2.5 W	6	3.5	2.5	2.5 / 3	-25 to 60	IP 65

Selection table

Con-nection	Nominal width	Flow coefficient Cv		Working pressure difference (bar)		Coil type	(C)	Manual override	Exhaust air restrictor	Art. No. (~ / =)
				min.	max. Air/gas					
(G)	(mm)	m^3/h	(l/min)		~/=	~ /=				
Standard: electro-pneumatic energising, spring return (monostable)						**Optional:** with/without exhaust air restrictor				
1/4	6	0.6	10	2	10	CM22-2.5 W	1 1	Yes Yes	No Yes	**103647 230/50** **103648 24 =**
Optional: electro-pneumatic energising and return (bistable), with/without exhaust air restrictor										
1/4	6	0.6	10	2	10	CM22-2.5 W	2 2	Yes Yes	No Yes	**On request**

(2) Other voltages and 60 Hz on request
(3) Variants for temperatures down to –40 °C on request

(C) Design type (see dimensions)

© Riegler 15-31

RIEGLER & Co. KG
Schützenstraße 27
72574 Bad Urach
Tel. +49 7125 9497-642
technik@riegler.de

Subject to technical changes and errors reserved.
The proficiency testing is the responsibility of the user.
18.11.2026 The specified data do not represent legally guaranteed properties.

Dimensions [mm], weights [g]

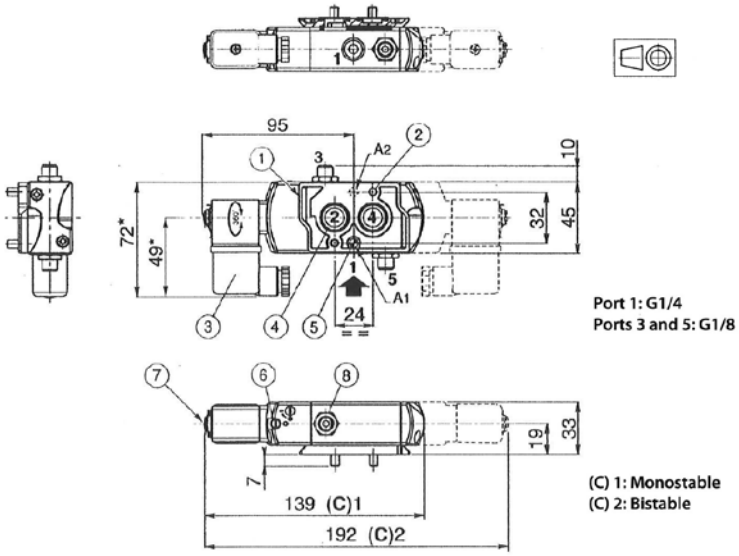

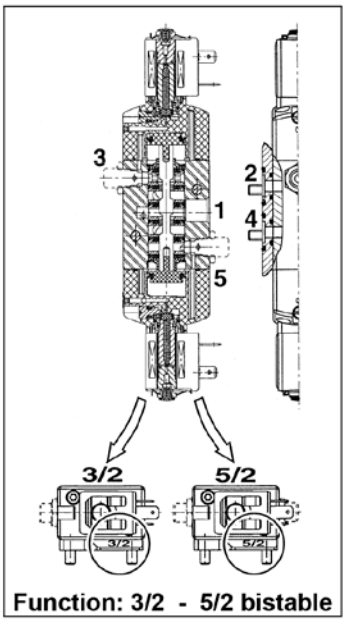

Function: 3/2 - 5/2 bistable

1. Interchangeable plate, can be rotated
2. Fixing: 2 bolts M5 x 35 Depth 7 mm
3. Cable socket, can be rotated 180°
4. 2 O-rings (included in scope of supply)
5. 1 bore hole Ø 5 mm for assembly safeguard
   - Position A1: 3/2 function
   - Position A2: 5/2 function
6. Latching manual override
7. Port for venting the pilot valve Ø M5 with vent protection
8. Exhaust air restrictor for ports 3 and 5 (on request)

Art. No. / Type No.	(C)	Weight [g] (1) 3/2	5/2
103647 / 551.01	1	324	324
103648 / 551.02			

(C) Design type
(1) Including magnet and cable socket

Installation

- Any mounting position
- 3/2 – 5/2 interchangeable plate and flange pattern acc. to **NAMUR**
- The interchangeable plate must be positioned for the 3/2 or 5/2 function before the valve is assembled on the actuator
- Assembly safeguard (if required), bolts and seals are included in the scope of supply
- Threaded connections acc. to ISO 228/1
- Other pipe connections on request
- Assembly and servicing instructions are enclosed
- Replacement coils can be supplied

Special designs on request

- Flameproof bodies (EEx **d, m, em, i**) in accordance with **CENELEC** standards
- Flameproof and water-tight body in accordance with **NEMA** standards
- Compliance with **UL** standards
- CM25 coil type with cable socket, size 30, in accordance with ISO 4400 **(PG 11P)**
- Coil made of polyamide
- Variants: pneumatic energising, with/without exhaust air restrictor
- Set with fixing bolts made of stainless steel
- Set with two exhaust air restrictors
- Cable socket with LED and suppressor circuit or pre-cut cable

Coils

Voltage [V]		Art. No. / Type No.
~	24	118750 / 430-4878
	230	118753 / 430-4886
	115	118752 / 430-4884
=	24	118749 / 430-4869

RIEGLER & Co. KG
Schützenstraße 27
72574 Bad Urach
Tel. +49 7125 9497-642
technik@riegler.de

Subject to technical changes and errors reserved.
The proficiency testing is the responsibility of the user.
18.11.2026 The specified data do not represent legally guaranteed properties.

ASCO™ Spool Valves

single/dual solenoid (mono/bistable function) - pilot operated or air operated aluminium body - "NAMUR" style - 1/4 and 1/2 tapped

3/2 NC - 5/2 - 5/3
SERIES
551 - 553

Features

- *The monostable spool valves in conformity with IEC 61508 Standard (2010 route 2_H version) have TÜV (551 series) and EXIDA (551-553 series) certified with integrity levels: SIL 2 for HFT = 0 / SIL 3 for HFT = 1*
- *The spool valves have threaded port connections and "NAMUR" style interface*
- *The same spool valve can be adapted for 3/2 NC or 5/2 functions for controlling double-acting and single-acting actuators*
- *All the exhaust ports of the spool valve are connectable, providing better environmental protection. Particularly recommended for sensitive areas, such as clean rooms, and applications in the pharmaceutical and food processing sectors*
- *The valves offer environmental protection against the ingress of liquids, dusts or other foreign matter (environmentally-protected construction)*
- *Epoxy moulded coil for general service applications*
- *The solenoid valves satisfy all relevant EU Directives*

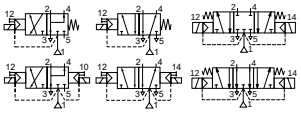

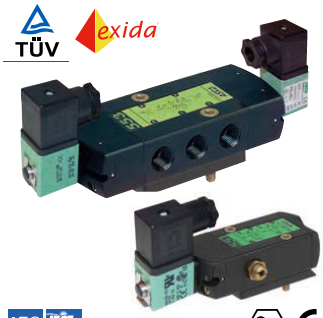

General

Differential pressure	2 - 10,4 bar [1 bar =100 kPa]
Flow (Qv at 6 bar)	1/4 = 700 l/min (ANR)
	1/2 = 3000 l/min (5/2, 5/3)

fluids (✶)	temperature range (TS)	seal materials (✶)
air, inert gas, filtered	-25°C to +60°C	NBR (nitrile) + PUR (polyurethane)

Materials in contact with fluid

(✶) Ensure that the compatibility of the fluids in contact with the materials is verified

Body, end cover	Aluminium, black anodized
End cover (spring return)	Glass fibre filled PA
Interface plates	Glass fibre filled PA
Spool valve internal parts	Zamak, stainless steel, POM, aluminium
Seals	NBR + PUR
Core tube	Brass
Core and plugnut	Stainless steel
Shading coil	Copper

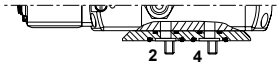

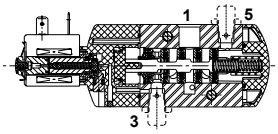

3/2 NC - 5/2 function

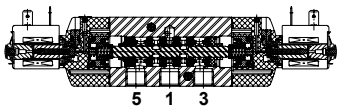

5/3 function

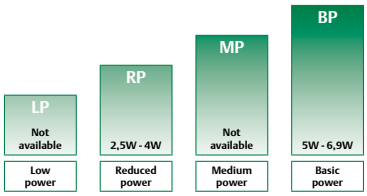

POWER LEVELS - cold electrical holding values (watt)

Air operated specifications

pipe size	orifice size	flow coefficient Kv		operating pressure differential (bar) min..	max. (PS) air (✶)	prefix optional	basic catalogue number
(❖)	(mm)	(m^3/h)	(l/min)		-		
3/2 NC - 5/2 - Air pilot operated - spring return (monostable)							
1/4	6	0,75	12,5	2	10	-	❖551A101 (1)
1/2	13	3,15	52,5	2	10	-	❖553A101 (1)
3/2 NC - 5/2 - Air pilot operated and return (bistable)							
1/4	6	0,75	12,5	2	10	-	❖551A102
1/2	13	3,15	52,5	2	10	-	❖553A102

Pilot operated specifications

pipe size	orifice size	flow coefficient Kv		operating pressure differential (bar) min.	max. (PS) air (✶) ~	=	power level	prefix optional solenoids NEMA 7 & 9 EF (2)	ATEX / IECEx Ex e mb WBLP	Ex mb PV	IP65 SC	basic catalogue number
(❖)	(mm)	(m^3/h)	(l/min)				~/=					
3/2 NC - 5/2 - Solenoid air pilot operated - spring return (monostable)												
1/4	6	0,6	10	2	10	10	RP	-	●	-	●	❖551A001 (1)
							BP	●	-	-	-	❖551G001 (1)
							RP	-	-	●	-	X❖551A001 20787 (1)
1/2	13	2,49	41,5	2	10	10	RP-BP	-	●	●	●	❖553A001 (1)
							BP	●	-	-	-	❖553G001 (1)

❖ Select 8 for NPT ANSI 1.20.3 or select G for ISO G (228/1) ● Available feature - Not available
(1) Certified IEC 61508 Functional Safety data, use suffix "SL".
(2) UL CSA

80108GB-2020/R01

RIEGLER & Co. KG
Schützenstraße 27
72574 Bad Urach
Tel. +49 7125 9497-642
technik@riegler.de

Subject to technical changes and errors reserved.
The proficiency testing is the responsibility of the user.
18.11.2026 The specified data do not represent legally guaranteed properties.

3/2 NC - 5/2 - 5/3
SERIES
551 - 553

Pilot operated specifications

pipe size	orifice size	flow coefficient Kv		operating pressure differential (bar)			power level	prefix optional solenoids				basic catalogue number
				min.	max. (PS)			NEMA	ATEX / IECEx		IP65	
					air (✶)			7 & 9	Ex e mb	Ex mb		
(❖)	(mm)	(m^3/h)	(l/min)		~	=	~/=	EF [1]	WBLP	PV	SC	
3/2 NC - 5/2 - Solenoid air pilot operated and return (bistable)												
1/4	6	0,6	10	2	10	10	RP	-	●	-	●	❖551A002
							BP	●	-	-	-	❖551G002
							RP	-	-	●	-	X❖551A002 20787
1/2	13	2,49	41,5	2	10	10	RP-BP	-	●	●	●	❖553A002
							BP	●	-	-	-	❖553G002
5/3 - W1 - pressure held, solenoid air pilot operated and return												
1/4	6	0,6	10	2	10	10	RP	-	●	-	●	❖551A065
							RP	-	-	●	-	X❖551A065 20787
1/2	13	2,49	41,5	2	10	10	RP-BP	-	●	●	●	❖553A065
5/3 - W3 - pressure release, solenoid air pilot operated and return												
1/4	6	0,6	10	2	10	10	RP	-	●	-	●	❖551A066
							RP	-	-	●	-	X❖551A066 20787
1/2	13	2,49	41,5	2	10	10	RP-BP	-	●	●	●	❖553A066

❖ Select 8 for NPT ANSI 1.20.3 or select G for ISO G (228/1) ● Available feature - Not available
[1] UL CSA

80108GB-2019/R04

RIEGLER & Co. KG
Schützenstraße 27
72574 Bad Urach
Tel. +49 7125 9497-642
technik@riegler.de

Subject to technical changes and errors reserved.
The proficiency testing is the responsibility of the user.
18.11.2026 The specified data do not represent legally guaranteed properties.

Prefix table

prefix							description	power level			
1	2	3	4	5	6	7		LP	RP	MP	BP
E	F						Explosionproof - NEMA 7, 9 - Zinc plated steel conduit (18" continuous leads)	-	-	-	●
E	F	H	T				EF (18" continuous leads) + high temperature	-	-	-	●
E	F	H	T	L			EF + high temperature + 72" continuous leads	-	-	-	●
E	F	L					EF + 72" continuous leads	-	-	-	●
J	B	E	F				EF + Junction box (conduit in 1/2" NPT)	-	-	-	●
J	B	E	F	M	F		EF + Junction box (conduit in 1/2" NPT) + surge suppression coils	-	-	-	●
J	C	E	F				EF + Junction box (conduit in 3/4" NPT)	-	-	-	●
J	C	E	F	H	T		EF + Junction box (conduit in 3/4" NPT) + high temperature	-	-	-	●
P	V						Encapsulated epoxy moulded (EN/IEC 60079-18)*	-	●	-	●
W	B	L	P				I.S./encapsulation with PBT IP67 enclosure (EN/IEC 60079-7, -18, -31)*	-	●	-	-
S	C						Solenoid with spade plug connector (EN/IEC 60730)	-	●	-	●
						X	Other special constructions	-	●	-	●

Suffix table

suffix							description	power level			
1	2	3	4	5				LP	RP	MP	BP
	G	D					Non-electrical, 2 GD, construction safety, gas/dust (EN ISO 80079-36/37)	-	-	-	-
			M	S			Screw type manual operator	-	●	-	●
	S	L					Certified IEC 61508 Functional Safety data (1)	-	●	-	●

Product selection guide

STEP 1
Select basic catalogue number, including pipe thread indentification letter. Refer to the specifications table on page: 1 or 2
Example: G551A001

STEP 2
Select prefix (combination). Refer to the specifications table and the prefix table, respect the indicated power level.
Air operated version, does not use prefix.
Example: SC

STEP 3
Select suffix (combination) if required. Refer to the suffix table, respect the indicated power level.
GD suffix available for air operated version only (do not use manual operator suffix).
Example: MS

STEP 4
Select voltage. Refer to standard voltages on page: 4
Example: 230V / 50Hz

STEP 5
Final catalogue / ordering number
Example:
SCG551A001MS 230 V / 50 Hz

Options & Accessories

series	pipe size	exhaust protector (stainless steel)		
		(G)	(NPT)	(M)
551	1/8	**34600418** (2)	**34600482** (2)	-
551 (+ W1/W3)	1/4	**34600419** (2)	**34600483** (2)	-
553	1/2	**34600479** (2)	**34600481** (2)	-
551/553	M5	-	-	**34600484** (2)

● Available feature
- Not available
* ATEX/IECEx valves using these solenoids are approved according to EN ISO 80079-36 (2016) and EN ISO 80079-37 (2016) [non electrical]
(1) Not to use with MS suffix
(2) Provided with "SL" suffix

Ordering examples valves:

SC	G	551 **A** 001	**MS**	230V / 50 Hz
SC	G	551 **A** 001	**MMS**	230V / 50 Hz
PV	X8	551 **A** 002	**20787**	115V / 50 Hz
WBLP	G	551 **A** 001	**MS**	24V / DC
	G	553 **A** 102		
	G	551 **A** 102	**GD**	
	G	551 **A** 101	**GD SL**	
SC	G	551 **A** 001	**SL**	230V / 50 Hz

prefix
pipe thread
basic number
voltage
suffix

80108GB-2019/R04

RIEGLER & Co. KG
Schützenstraße 27
72574 Bad Urach
Tel. +49 7125 9497-642
technik@riegler.de

Subject to technical changes and errors reserved.
The proficiency testing is the responsibility of the user.
18.11.2026 The specified data do not represent legally guaranteed properties.

3/2 NC - 5/2 - 5/3
SERIES
551 - 553

Explanation of temperature ranges of solenoid valves

Valve temperature range	The valve temperature range (TS) is determined by the selected seal material, the temperature range for proper operation of the valve and sometimes by the fluid (e.g. steam)
Operator ambient temperature range	The operator ambient temperature range is determined by the selected power level and the safety code
Total temperature range	The temperature range of the complete solenoid valve is determined by the limitations of both temperature ranges above

Electrical characteristics

Coil insulation class	F
Electrical safety	IEC 335
Standard voltages	DC (=) 24V - 48V
	AC (~) 24V - 48V - 115V - 230V/50Hz; other voltages and 60Hz are available on request

prefix option	power ratings				operator ambient temperature range (TS)	safety code	electrical enclosure protection (EN 60529)	replacement coil		type (1)
	inrush ~	holding ~		hot/cold =				~	=	
	(VA)	(VA)	(W)	(W)	(C°)			230 V/50 Hz	24V/DC	
Basic power (BP)										
SC	15	7	5	4/5	-25 to +60	EN 60730	IP65, moulded	400727-117	400727-185	02
PV	-	-	6,3	-	-40 to +65	II2G Ex mb IIC T3 Gb,II2D Ex mb IIIC Db	IP67 moulded	- (2)	- (2)	04
PV	-	-	-	6,9	-40 to +40	II2G Ex mb IIC T3 Gb,II2D Ex mb IIIC Db	IP67 moulded	- (2)	- (2)	04
EF	55	23	10,5	9/11,2	-40 to +52/40	NEMA type 7 and 9	NEMA 4X	-	-	07
EFHT	55	23	10,5	9/11,2	-40 to +52/40	NEMA type 7 and 9	NEMA 4X	-	-	06
JBEF	55	23	10,5	9/11,2	-40 to +52/40	NEMA type 7 and 9	NEMA 4X	-	-	12
JBEFHT	55	23	10,5	9/11,2	-40 to +52/40	NEMA type 7 and 9	NEMA 4X	-	-	12
Reduced power (RP)										
SC	6	3,5	2,5	2,5/3	-25 to +60	EN 60730	IP65, moulded	400127-097	400904-542	01
PV	-	-	4	-	-40 to +60/65	II2G Ex mb IIC T4-T3 Gb,II2D Ex mb IIIC Db	IP67 moulded	- (2)	- (2)	03
PV	-	-	-	3	-40 to +40/60/60	II2G Ex mb IIC T5-T4-T3 Gb,II2D Ex mb IIIC Db	IP67 moulded	- (2)	- (2)	03
WBLP	-	-	3,5	-/4	-40 to +65	II2G Ex e mb IIC T4 Gb, II2D Ex tb IIIC Db	IP67 PBT	- (2)	- (2)	05-06

(1) Refer to the dimensional drawings on pages: 5 to 7 (Air operated versions: Refer to the dimensional drawings on pages: 7).
(2) Multiple coil kits are available under ATEX/IECEx, contact us

Electrical connections

prefix	connection
SC	Type 01: Spade plug connector with cable gland DIN 43650, 11 mm, industry standard B, for cables with an outer diameter from 6 to 8 mm Type 02: Spade plug connector with cable gland EN175301-803A (ISO 4400) for cables with an outer diameter from 6 to 10 mm
PV	Moulded-in cable, standard length 2 m
WBLP	M20 cable gland for cables with an outer diameter from 7 to 8,5 mm
EF	1/2" NPT conduits
JBEF	EF + Junction box

Additional options

- Other pipe threads are available on request
- Coil type CM25 with connector size 30 ISO 4400 (Pg 11P) (551 Series)
- Polyamide coil
- Ex mb (prefix "PV") solenoid can be supplied with various cable lengths
- Set of stainless steel mounting screws (series 551), catalogue number: **97802212**
- Set of two G 1/8 exhaust reducers (series 551), catalogue number: **88100344**

Installation

- Multi language installation/maintenance instructions are included with each valve
- The valves can be mounted in any position without affecting operation
- Do not connect the pressure supply to the exhaust port 3. The "environmentally-protected" construction is not adapted for NO function. Contact us for function available in specific version
- IEC 61508 Functional Safety (suffix SL). Check temperature range of valve body and solenoid for suitability. For probability of failure, contact us
- 3/2 NC-5/2 spool valve supplied with one or two interface plates with NAMUR mating surfaces. Depending on function (3/2 NC or 5/2), position the plate (series 551) or one of the two plates (series 553) on the spool valve body before installing on actuator
- It is necessary to connect pipes or fittings to the exhaust ports to protect the internal parts of the spool valve and its pneumatic operator if used outside or in harsh environments (dusts, liquids etc.)
- Dowel pin (if necessary), bolts and gaskets are standard supplied
- Threaded pipe connection identifier is 8 = NPT (ANSI 1.20.3); G = G (ISO 228/1)

80108GB-2019/R04

RIEGLER & Co. KG
Schützenstraße 27
72574 Bad Urach
Tel. +49 7125 9497-642
technik@riegler.de

Subject to technical changes and errors reserved.
The proficiency testing is the responsibility of the user.
18.11.2026 The specified data do not represent legally guaranteed properties.

Spareparts

	Art. No.	Type No.
plug connector, 22 mm, type B, housing standard black, with seal and screw	117313	1920.9P

RIEGLER & Co. KG
Schützenstraße 27
72574 Bad Urach
Tel. +49 7125 9497-642
technik@riegler.de

Subject to technical changes and errors reserved.
The proficiency testing is the responsibility of the user.
18.11.2026 The specified data do not represent legally guaranteed properties.