Piston rod-free cylinder

Serie ZRL1

PLUS

Art. No. 150084

Type No. ZRL1F.160575

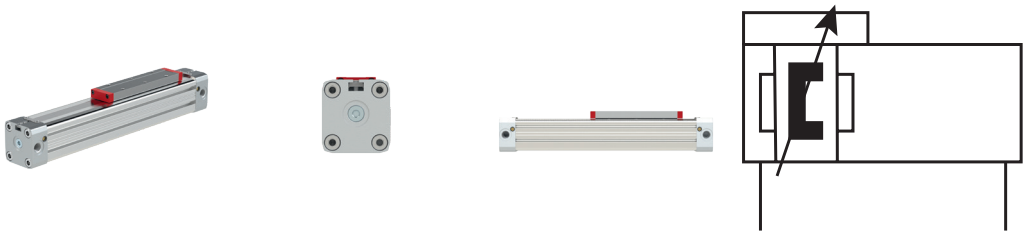

Exemplary illustration

ZRL1F series actuators are characterized by the particularly flat piston design and include piston diameters of 16, 25, 32, 40, 50 and 63 mm with stroke lengths up to 5700 mm. Suitable for filtered (50 µm) and unlubricated or lubricated compressed air. Please ensure continuous oiling when using lubricated compressed air.

Please refer to our type code in the data-sheet for the available variants and their corresponding type designations for your individual inquiry.

Other special designs are also available on request.
After receipt of order, the cylinders will be manufactured individually for you.
Usually, shipment takes place within 5 working days, depending on the number of pieces.
Freight and packaging costs are charged individually and regardless of the value of the goods.

Technical data

Piston Ø	16 mm
Stroke	575 mm
Magnet	with magnet
Connection	M5
Medium	filtered air (max. 50 µm)
Working pressure	0.5 - 8 bar
Temperature range	-10 to 80 °C
Function	double-acting
Screws	steel 10.9 zinc plated
Cushioning	cushioned
Number of pneumatic ports	3
Mounting position	any
Forces and moments	See forces and moments
Support forces	See deflection diagram
Sealant	oil-proof synthetic material (NBR)
Air connection	3-fold on both sides

RIEGLER & Co. KG
Schützenstraße 27
72574 Bad Urach
Tel. +49 7125 9497-642
technik@riegler.de

Subject to technical changes and errors reserved.
The proficiency testing is the responsibility of the user.
12.03.2026 The specified data do not represent legally guaranteed properties.

Technical data

Load connection	rigid

NBR seals recommended for piston speeds ≤ 1 m/s. FPM seals recommended for speeds > 1 m/s

Commercial data

Customs tariff number	84123100
Country of origin	DE
eCl@ss 5.1.4	27290401
eCl@ss 9.0	27290490
UNSPSC_Code_v190501	27131701
UNSPSC_CodeDesc_v190501	Pneumatic cylinders

Materials

Part	Material
Barrel	High-strengh anodized aluminium
End caps	High-strengh anodized aluminium
Piston axle	High-strengh anodized aluminium
Seals	Oil-proof synthetic material NBR
Sealing bands	Stainless steel
Piston caps	Wear-proof synthetic material
Sliding parts	Wear-proof synthetic material

NBR seals recommended for piston speeds ≤ 1 m/s. FPM seals recommended for speeds > 1 m/s

RIEGLER & Co. KG
Schützenstraße 27
72574 Bad Urach
Tel. +49 7125 9497-642
technik@riegler.de

Subject to technical changes and errors reserved.
The proficiency testing is the responsibility of the user.
12.03.2026 The specified data do not represent legally guaranteed properties.

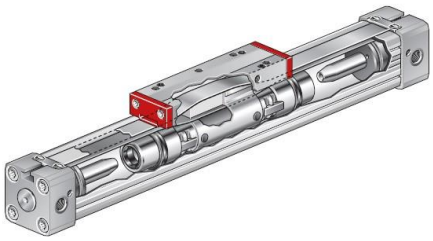



ZRL1C series
Classic design with high carriage



ZRL1F series
Compact design with low carriage



ZRL1S series
With integrated sliding guide

Other designs with different guides or as duo assembly on request.

Features:

- Equal forces in both directions
- Direct force output, protected against rotation
- Particularly space-saving - installation length halved compared to cylinders with piston rod
- Extreme stroke lengths up to 5700 mm
- End caps with three air connections and adjustable cushioning
- High acceleration and velocity
- High degree of design freedom

Application examples:

- For linear and direct horizontal, vertical and diagonal load movements
- Can be used as a self-supporting structural or pure load-bearing machine elment in single, multiple or parallel axis arrangement
- Suitable for conveyor systems, packaging and filling systems, handling systems, workpiece transport systems, door closing systems, etc.

Delivery times, freight and packaging costs:

- After receipt of order, the cylinders will be manufactured individually for you.
- Usually, shipment takes place within 5 working days, depending on the number of pieces.
- Freight and packaging costs are charged individually and regardless of the value of the goods.

Functional description:

The entire tube is slotted throughout its full length. The force is transmitted through the load friction, which is attached to the piston axle. The piston axis is designed in such a way that a bridge guided through the tube slot connects the inner part of the piston axis to the outer part.

Therefore the force transmission runs as follows:
Air pressure --> Piston area --> piston axle (inner part) --> piston axle (outer part) --> load friction --> load.
The sealing of the cylinder slot is garanteed by a precision ground inner steel band. The inner band is kept in position by magnet stripes on both sides of the slot.

In addition, a second steel band on the outside of the slot serves to cover the dust. During piston movement as well as during stillstand of it both steelbands are lifted right after the piston seal and led through the piston axle by means of a separate own guiding chanel. Both steel bands are lifted off the slot behind the piston seal during piston travel and at standstill, and each is guided through the piston axis by its own guide channel. In front of and behind the piston, the bands seal the cylinder slot again.

RIEGLER & Co. KG
Schützenstraße 27
72574 Bad Urach
Tel. +49 7125 9497-642
technik@riegler.de

Subject to technical changes and errors reserved.
The proficiency testing is the responsibility of the user.
12.03.2026 The specified data do not represent legally guaranteed properties.

Structure of the type code:

Example:

ZRL1F.250250.KBWF.LL.N.EX

Piston Ø [mm]	Stroke min.–max. [mm]	Variant	Lubrication	Magnet	ATEX
16	0100 ... 4400 (Ø 16)	Standard: - Rigid load connection - Screws 10.9 zinc plated - 3 air connections - NBR seals For speeds ≤1 m/s.	Standard lubrication	Standard: with magnet	Standard: no
25	0100 ... 5700 (Ø 25, 32, 40, 50, 63)		**LL** Slow speed lubrication Recommended for speeds ≤ 0,1m/s (NBR seals)/ ≤ 0,2m/s (FPM seals).	**N** without magnet	**EX** yes
32					
40					
50					
63					
		SX Same as standard, except: ⊕ Stainless steel screws			
		F Same as standard, except: ⊕ FPM seals For speeds >1 m/s, at which the seals are exposed to increased temperature development.			
		SXF Same as standard, except: ⊕ Stainless steel screws ⊕ FPM seals For speeds >1 m/s.			
		LE Same as standard, except: ⊕ Air supply from one side (only for Ø 32, 40, 50, 63)			
		KBW Same as standard, except: ⊕ Flexible load connection			
		KBWF Same as standard, except: ⊕ Flexible load connection ⊕ FPM seals For speeds >1 m/s.			

→ For each position in the type code, only one option can be selected by default.
Piston Ø and stroke must always be defined as the minimum specification, e. g. ZRL1F.320100.

→ Standard options are not explicitly defined, meaning the position in the type code remains empty, e. g. ZRL1F.320100.LL.

Suitable for use in EX areas – ATEX

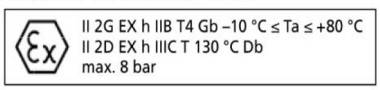

RIEGLER & Co. KG
Schützenstraße 27
72574 Bad Urach
Tel. +49 7125 9497-642
technik@riegler.de

Subject to technical changes and errors reserved.
The proficiency testing is the responsibility of the user.
12.03.2026 The specified data do not represent legally guaranteed properties.

Dimensions:

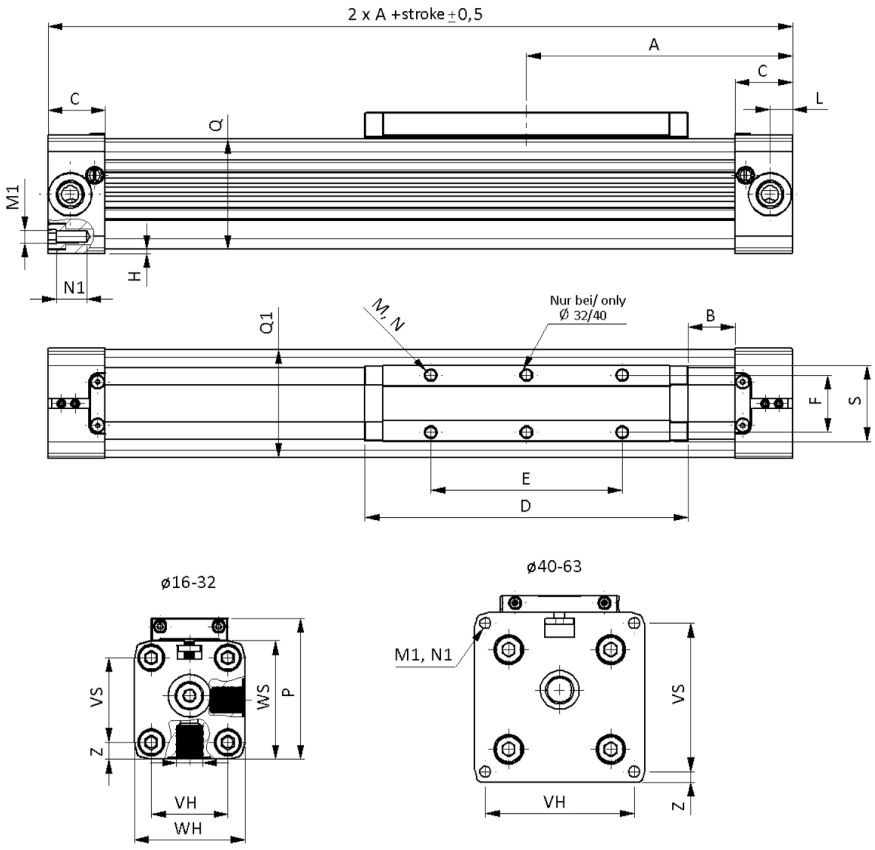

Ø	A	B	C	D	E	F	G	H	L	M	M1	N	N1	P
16	65	15.5	15	69	36	16.5	M5	1.0	5.5	M4	M3	7	7	36.5
25	100	21.0	23	111	65	25.0	G 1/8	2.0	8.5	M5	M5	10	12	52.5
32	125	22.0	27	152	90	27.0	G 1/4	2.0	10.5	M6	M6	7	14	66.5
40	150	44.0	30	152	90	27.0	G 1/4	6.75	15.0	M6	M6	10	17	80.0
50	175	42.0	33	200	110	27.0	G 1/4	0.5	11.7	M6	M6	6	18	88.0
63	215	47.5	50	235	155	36.0	G 3/8	1.5	25.0	M8	M8	15	18	123.0

Ø	Q_xQ_1	S	VS	VH	WS	WH	Z
16	24.5x25	22.0	18	18	27	27	4.5
25	36x36	33.0	27	27	40	40	6.5
32	52x51	36.0	40	36	56	52	8.0
40	58.5x59	36.4	54	54	69	72	9.0
50	77x78	56.0	70	70	80	80	4.0
63	102x102	50.0	78	78	106	106	14.5

RIEGLER & Co. KG
Schützenstraße 27
72574 Bad Urach
Tel. +49 7125 9497-642
technik@riegler.de

Subject to technical changes and errors reserved.
The proficiency testing is the responsibility of the user.
12.03.2026 The specified data do not represent legally guaranteed properties.

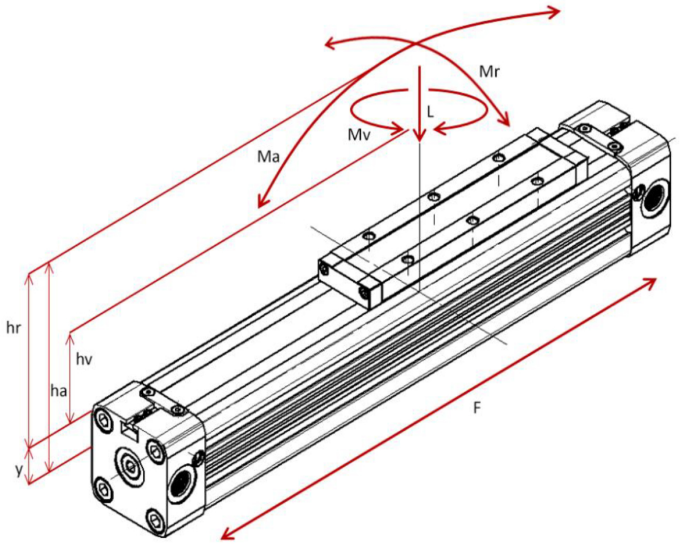

Formulas

$M_a = F * h_a$

$M_r = F * h_r$

$M_v = F * h_v$

Forces and moments:

	ZRL1F series					
Piston Ø [mm]	**16**	**25**	**32**	**40**	**50**	**63**
Center distance Y [mm]	9	14	18	22	28	36
Effective force F (6 bar) [N]	110	250	420	640	1000	1550
Cushioning S [mm]	15	21	26	32	32	40
Max. load L [N]	120	300	450	750	1200	1650
Max. bending moment axial M_a [Nm]	4	15	30	60	115	200
Max. bending moment radial M_r [Nm]	0.3	1	2	4	7	8
Max. torque M_v [Nm]	0.5	3	4.5	8	15	24

The figures above are max. values based on light shock free duty and speed of v ≤ 0.45 m/sec (ZRL1F series).
Max. pressure 6 bar.
An exceeding of the values in dynamic operations, even for short moments, has to be avoided.

Attention:
Resulting forces could lead to extreme exceedings of the values. In case of undefinable situations, the above max. values have to be reduced by 10 to 20 %.

RIEGLER & Co. KG
Schützenstraße 27
72574 Bad Urach
Tel. +49 7125 9497-642
technik@riegler.de

Subject to technical changes and errors reserved.
The proficiency testing is the responsibility of the user.
12.03.2026 The specified data do not represent legally guaranteed properties.

Cushioning diagram:

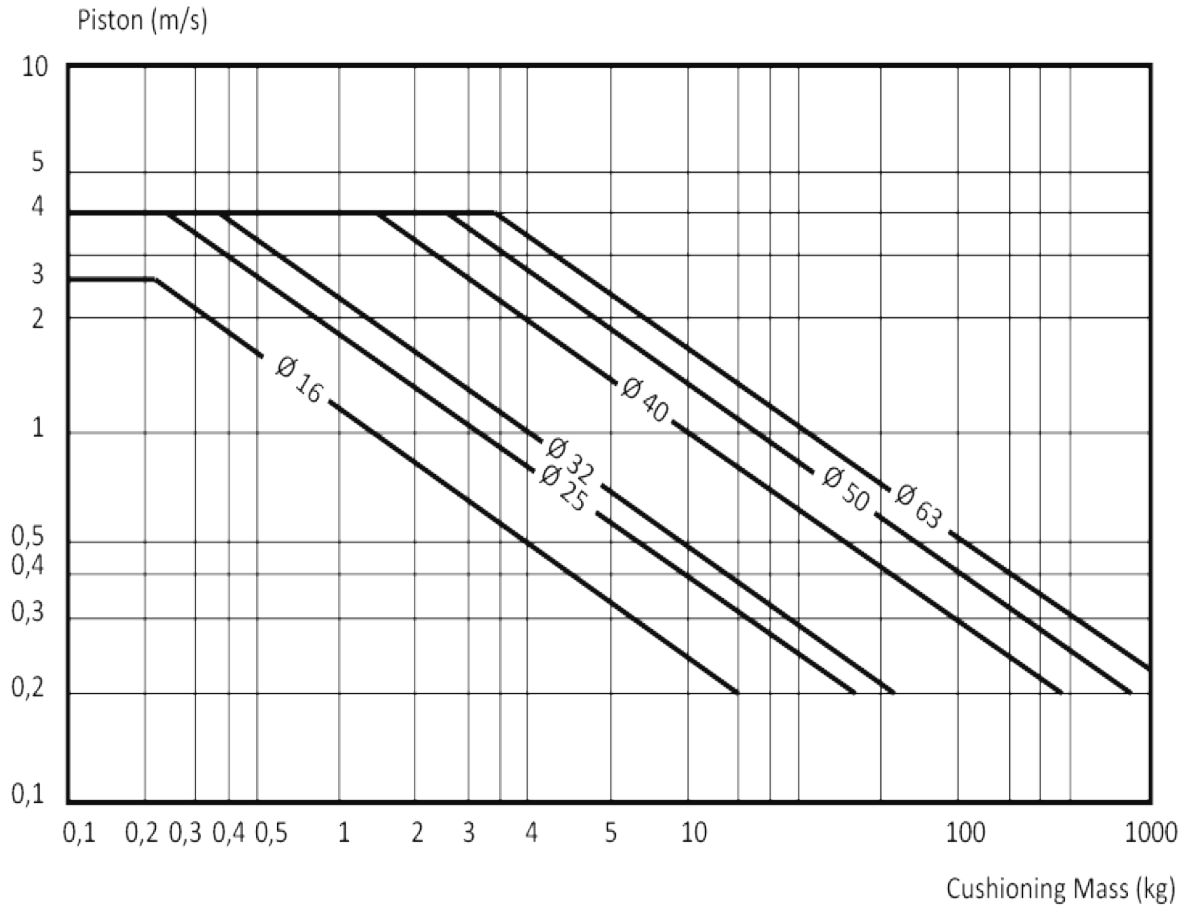

Pay attention to the following points:

- If the limits above are exceeded additional shock absorbers are necessary.
- For piston speeds of > 1 m/s FPM seals are recommended.
- For piston speeds ≤ 0.1 m/s (NBR) / ≤ 0.2 m/s (FPM) we recommend slow speed lubrication (variant LL).
- Maximum duration life will be achieved when piston speeds do not exceed 1 m/s.

RIEGLER & Co. KG
Schützenstraße 27
72574 Bad Urach
Tel. +49 7125 9497-642
technik@riegler.de

Subject to technical changes and errors reserved.
The proficiency testing is the responsibility of the user.
12.03.2026 The specified data do not represent legally guaranteed properties.

Deflection diagram:

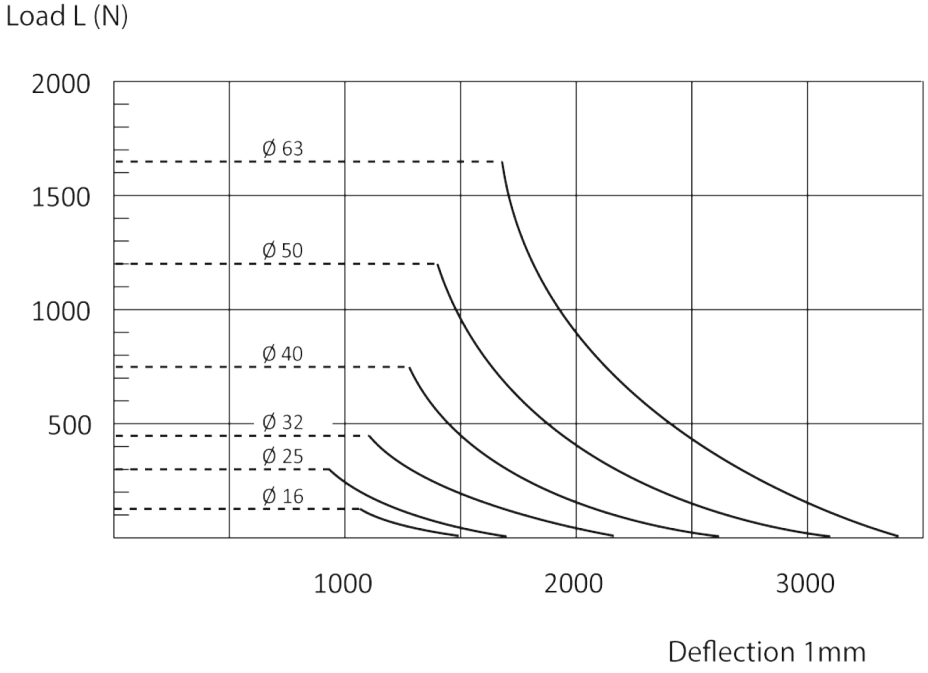

max. distance (SL) in mm - without mid section support / mid section mounting

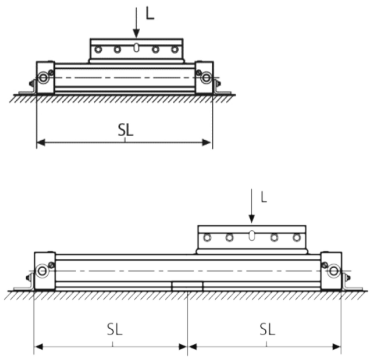

Diagram information:

- Calculated deflections without support of 0.5 to 1 mm allow exceeding of supporting distance.
- Calculated deflections without support of 1 to max. 1.5 mm require reduction of the supporting distance.

RIEGLER & Co. KG
Schützenstraße 27
72574 Bad Urach
Tel. +49 7125 9497-642
technik@riegler.de

Subject to technical changes and errors reserved.
The proficiency testing is the responsibility of the user.
12.03.2026 The specified data do not represent legally guaranteed properties.

Accessories

	Art. No.	Type No.
Foot mounting for rodless cylinders ZRL1 Ø16, 2 pieces with 4 screws	129640	FB.ZRL1.16
Mid section support for rodless cylindersZRL1 Ø16, 2 pieces	129647	ZS.ZRL1.16
Mobile mid section mounting G for rodless cylinders ZRL1 Ø16, 1 piece with 2 screws	129653	MMBG.ZRL1.16
Articulated carrier for rodless cylinders ZRL1F, Ø16, 1 piece with 4 screws and 4 washers	129661	KBW.ZRL1F.16
T-slot sensor adapter for rodless cylinders ZRL1	129668	SA.ZRL1
Sensor cable with M8 connector, straight, 5m, PVC	129669	SK.M8.5
REED sensor, 2-wire, 5 m cable length with open strands, 5-130V AC/DC, 6W, NO, LED, for rodless cylinders ZRL1	129638	RS.ZRL1.K5
HALL sensor, 3-wire, M8 connector, 300 mm cable, 10-30V DC, 4W, NO, PNP, LED, for rodless cylinders ZRL1	129639	HS.ZRL1.PNP.M8
Mobile mid section mounting W for rodless cylinders ZRL1 Ø16, 1 piece with 2 screws	129655	MMBW.ZRL1.16
REED sensor, 2-wire, M8 connector, 300 mm cable, 5-50V AC/DC, 6W, NO, LED, for rodless cylinders ZRL1	129738	RS.ZRL1.M8
HALL sensor, 3-wire, 5 m cable with open strands, 10-30V DC, 4W, NO, PNP, LED, for rodless cylinders ZRL1	129739	HS.ZRL1.PNP.K5

RIEGLER & Co. KG
Schützenstraße 27
72574 Bad Urach
Tel. +49 7125 9497-642
technik@riegler.de

Subject to technical changes and errors reserved.
The proficiency testing is the responsibility of the user.
12.03.2026 The specified data do not represent legally guaranteed properties.