# Compact cylinder

acc. to ISO 21287 Ø 20 – 100

PLUS

**Art. No.** **193103**

**Type No.** **7.DMV.50050**

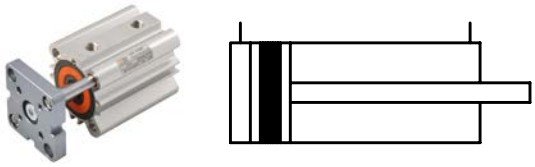

Exemplary illustration

New series acc. to ISO 21287 characterised by a very short and compact design.
The standard type features double-acting with a magnetic piston.
Available as a non-anti-rotation version with a choice of female or male thread, or as an anti-rotation version with a female thread.
Suitable for filtered, unlubricated or lubricated compressed air.
If lubrication is used, it must be continuous.

Further versions available on request.

## Technical data

| | |
|---|---|
| Series | LINER series |
| Version | anti-rotation version |
| Piston Ø | 50 mm |
| Stroke | 50 mm |
| Standard | acc. to ISO 21287 |
| Function | double-acting |
| Magnet | with magnet |
| Connection | G 1/8 |
| Piston rod thread | M10 IT |
| Medium | filtered compressed air with or without lubrication. If lubricated, then continuous. |
| Min. set pressure | 0.4 bar |
| Working pressure | max. 10 bar |
| Temperature range | -10 to 60 °C |
| Piston rod | C45 steel, hard chrome-plated |
| Tube | anodised aluminium jacket with T-slots |
| Piston | POM |
| Piston gasket | PU |

RIEGLER & Co. KG
Schützenstraße 27
72574 Bad Urach
Tel. +49 7125 9497-642
technik@riegler.de



Subject to technical changes and errors reserved.
The proficiency testing is the responsibility of the user.
16.10.2026 The specified data do not represent legally guaranteed properties.

## Technical data

| | |
|---|---|
| Piston rod gasket | PU |
| Static O-rings | NBR |

For proper operation, it is recommended to use compressed air filtered to ≤ 50 µm.

## Commercial data

| | |
|---|---|
| Customs tariff number | 84123100 |
| Country of origin | IT |
| eCl@ss 5.1.4 | 27290301 |
| eCl@ss 9.0 | 27290301 |
| UNSPSC_Code_v190501 | 27131701 |
| UNSPSC_CodeDesc_v190501 | Pneumatic cylinders |

# ISO 21287 CYLINDER SERIES LINER



Compact cylinder to ISO 21287, LINER series, available in different versions to meet all possible requirements:

- With or without magnet
- Double acting, single or through piston rod
- Double acting, perforated through piston rod
- Single acting, extended, retracted or through piston rod
- Single acting, perforated through rod
- Double acting anti-rotating version and double acting through piston rod
- Polyurethane or FKM/FPM gaskets (for high temperatures) also available
- Dimensions and centre distances to ISO 21287.

The heads have been eliminated for ease of installation, improved sturdiness and precision. The metal lining is designed to withstand heavy-duty work, tensile stress and impact. Technopolymer parts can withstand dynamic and pneumatic thrust. The lining virtually acts as a "bearing" to which most of user accessories are attached.
The wide range of anchors provide numerous fixing points.
Retractable magnetic limit switches can be mounted to identify the position in the cylinder grooves.



| TECHNICAL DATA | | | Ø20 | Ø25 | Ø32 | Ø40 | Ø50 | Ø63 | Ø80 | Ø100 |
|---|---|---|---|---|---|---|---|---|---|---|
| Max operating pressure | | bar | 10 | | | | | | | |
| | | MPa | 1 | | | | | | | |
| | | psi | 145 | | | | | | | |
| Temperature range | POLYURETHANE | °C | −10 to +60 | | | | | | −10 to +80 | |
| | FKM/FPM | °C | −10 to +150 (non-magnetic cylinders) | | | | | | | |
| Design | | | With profile | | | | | | | |
| Fixing centre distances | | | According to ISO 21287 | | | | | | | |
| Fluid | | | Unlubricated air. Lubrication, if used, must be continuous | | | | | | | |
| Versions | | | Double-acting, Double-acting through-rod, Single-acting extended or retracted rod, Single-acting through-rod, Single-acting through piston rod perforated, Double-acting through-rod perforated, Double-acting non-rotating, Double-acting through-rod non-rotating, No stick-slip. All versions are available with male or female piston rod. | | | | | | | |
| Sensor magnet | | | Available magnetic and non-magnetic versions. | | | | | | | |
| Inrush pressure | single piston rod | bar | 0.6 | 0.6 | 0.6 | 0.4 | 0.4 | 0.4 | 0.4 | 0.4 |
| | through-rod | bar | 0.8 | 0.8 | 0.6 | 0.4 | 0.4 | 0.4 | 0.4 | 0.4 |
| Forces generated at 6 bar thrust/retraction | | | See cylinder "**General technical data**" at the beginning of the chapter | | | | | | | |
| Weights | | | See cylinder "**General technical data**" at the beginning of the chapter | | | | | | | |
| Notes | | | For correct operation, it is advisable to use 50 µm filtered air **For speeds lower than 0.2 m/s to prevent surging, use the version No stick-slip and non-lubricated air.** | | | | | | | |

## COMPONENTS Ø 20-25

① PISTON ROD: stainless steel, thick chromed
② END CAP: high-performance technopolymer
③ BARREL: drawn anodized and calibrated aluminium alloy
④ PISTON GASKET: polyurethane or FKM/FPM (for high temperature)
⑤ MAGNET: plastoneodimio
⑥ PISTON ROD GASKET: polyurethane or FKM/FPM (for high temperature)
⑦ GUIDE BUSHING: sintered bronze
⑧ STATIC O-RINGS: NBR or FKM/FPM (for high temperature)

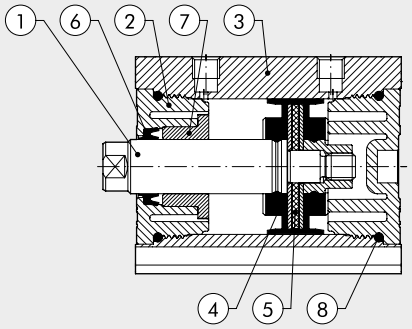




RIEGLER & Co. KG
Schützenstraße 27
72574 Bad Urach
Tel. +49 7125 9497-642
technik@riegler.de



Subject to technical changes and errors reserved.
The proficiency testing is the responsibility of the user.
16.10.2026 The specified data do not represent legally guaranteed properties.

## COMPONENTS Ø 32-63

① PISTON ROD: C45 stell or stainless steel, thick chromed
② END CAP: high-performance technopolymer
③ BARREL: drawn anodized and calibrated aluminium alloy
④ PISTON GASKET: polyurethane or FKM/FPM (for high temperature)
⑤ MAGNET: Ø 32 plastoneodimio - Ø 40 to 63 plastoferrite
⑥ PISTON ROD GASKET: polyurethane or FKM/FPM (for high temperature)
⑦ GUIDE BUSHING: sintered bronze
⑧ STATIC O-RINGS: NBR or FKM/FPM (for high temperature)

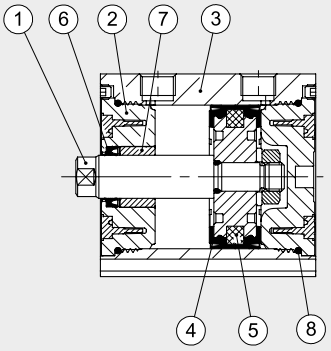


## COMPONENTS Ø 80-100

① PISTON ROD: C45 stell or stainless steel, thick chromed
② END CAP: anodized aluminium alloy
③ BARREL: drawn anodized and calibrated aluminium alloy
④ PISTON GASKET: polyurethane or FKM/FPM (for high temperature)
⑤ MAGNET: plastoferrite
⑥ PISTON ROD GASKET: polyurethane or FKM/FPM (for high temperature)
⑦ GUIDE BUSHING: steel strip with bronze and PTFE insert
⑧ STATIC O-RINGS: NBR or FKM/FPM (for high temperature)

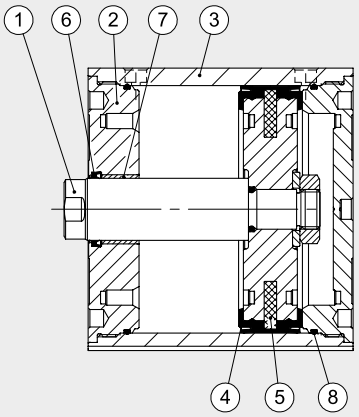


## FIXING OPTIONS

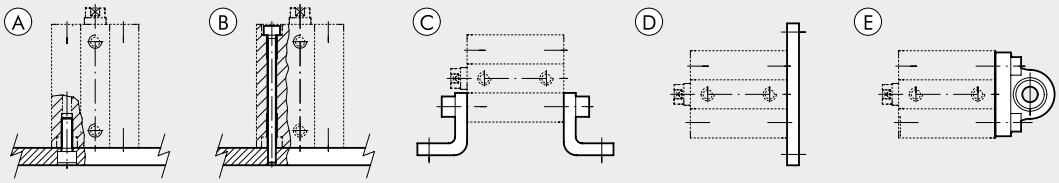


Ⓐ Fixing to structural work with a through screw, using the thread in the heads
Ⓑ Direct fixing from above using long through screws or tie rods. Non-magnetic stainless steel must be used (e.g. AISI 304)
Ⓒ Fixing with feet; the ordering code covers the supply of one foot and two screws for fixing to the cylinder
Ⓓ Fixing with a flange mounted on the front or rear head; the ordering code covers the supply of a flange and four screws for fixing to the cylinder
Ⓔ Fixing with articulated hinge to compensate for slight system misalignment and turn freely
The ordering code covers the supply of a hinge and four screws for fixing to the cylinder.



RIEGLER & Co. KG
Schützenstraße 27
72574 Bad Urach
Tel. +49 7125 9497-642
technik@riegler.de



Subject to technical changes and errors reserved.
The proficiency testing is the responsibility of the user.
16.10.2026 The specified data do not represent legally guaranteed properties.

## FORCE OF SPRINGS IN SINGLE-ACTING CYLINDERS (THEORETICAL)

| Bore | Ø 20 | Ø 25 | Ø 32 | Ø 40 | Ø 50 | Ø 63 | Ø 80 | Ø 100 |
|---|---|---|---|---|---|---|---|---|
| Min. load (N) | 8.40 | 13.90 | 19.00 | 24.80 | 36.30 | 50.20 | 77.60 | 131.80 |
| Max. load (N) | 20.90 | 33.20 | 35.90 | 53.70 | 62.20 | 82.30 | 118.90 | 183.30 |

## STROKES FOR COMPACT CYLINDERS ISO 21287

| Standard stroke for single-acting cylinders | Standard stroke for other types | Max. recommended strokes for other types | Max. recommended strokes for non-rotating cylinders | Max recommended strokes for through-rod perforated |
|---|---|---|---|---|
| Ø 20 to 100 → from 1 to 25 mm | Ø 20 to 25 → from 1 to 60 mm | Ø 20 to 25 → 300 mm | Ø 20 to 63 → 120 mm | Ø 20 to 40 → from 1 to 80 mm |
| | Ø 32 to 100 → from 1 to 80 mm | Ø 32 to 63 → 400 mm | Ø 80 to 100 → 150 mm | Ø 50 to 63 → from 1 to 100 mm |
| | | Ø 80 to 100 → 500 mm | | Ø 80 to 100 → from 1 to 160 mm |

Maximum recommended strokes. Higher values can create operating problems

## MAXIMUM LOADS FOR NON-ROTATING VERSION

TRANSVERSAL FORCE FOR NON-ROTATING

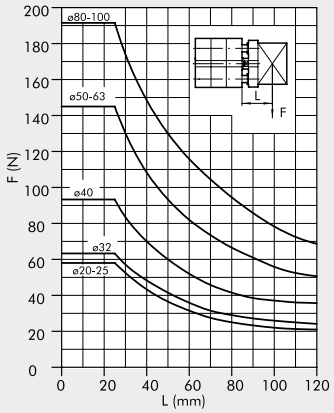


TRANSVERSAL FORCE FOR NON-ROTATING THROUGH-ROD

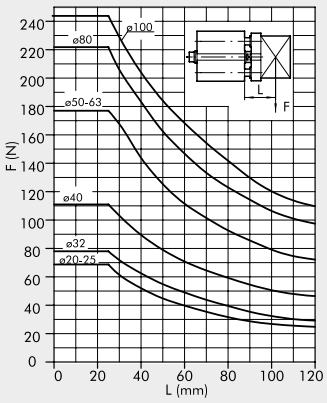


TORQUE DEPENDING ON STROKE

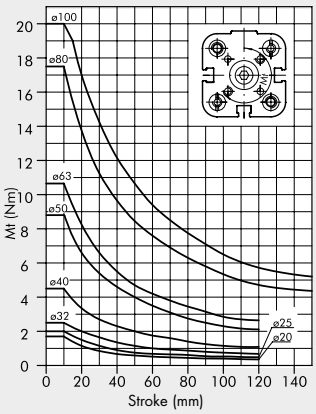




RIEGLER & Co. KG
Schützenstraße 27
72574 Bad Urach
Tel. +49 7125 9497-642
technik@riegler.de



Subject to technical changes and errors reserved.
The proficiency testing is the responsibility of the user.
16.10.2026 The specified data do not represent legally guaranteed properties.

## DIMENSIONS OF DOUBLE-ACTING Ø 20 to 50 AND SINGLE-ACTING Ø 20 to 50

SE-DE MALE PISTON ROD

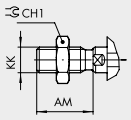


SE EXTENDED PISTON ROD

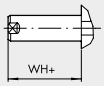


SE MALE EXTENDED PISTON ROD

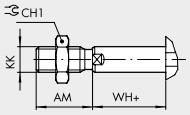


\+ = ADD THE STROKE
* = SECTION WITH TOLERANCE
1 = SENSOR SLOT
2 = SEAT FOR DIN 7984 SCREWS

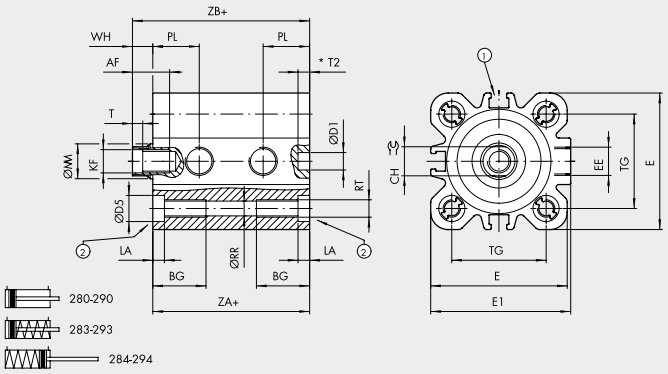


| Ø | AF | AM | BG | CH | CH1 | ØD1 H9 | ØD5 | E | E1 | EE | KF | KK | LA | ØMM | PL | ØRR | RT | T | T2 | TG ±0.2 | WH | ZA 0 +0.3 | ZB |
|---|---|---|---|---|---|---|---|---|---|---|---|---|---|---|---|---|---|---|---|---|---|---|---|
| **20** | 14 | 16 | 17.5 | 8 | 13 | 6 | 7.5 | 35.5 | 36.5 | M5 | M6 | M8 | 4.2 | 10 | 12 | 4.2 | M5 | 2.5 | 3 | 22 | 6 | 37 | 43 |
| **25** | 14 | 16 | 17.5 | 8 | 13 | 6 | 7.5 | 39.5 | 40 | M5 | M6 | M8 | 4.2 | 10 | 13 | 4.2 | M5 | 2.5 | 3.5 | 26 | 6 | 39 | 45 |
| **32** | 16.5 | 19 | 21.5 | 10 | 17 | 6 | 9 | 47 | 48.2 | G1/8 | M8 | M10x1.25 | 4 | 12 | 16 | 5.1 | M6 | 3.5 | 4 | 32.5 | 7 | 44 | 51 |
| **40** | 16.5 | 19 | 21.5 | 10 | 17 | 6 | 9 | 55.5 | 56.5 | G1/8 | M8 | M10x1.25 | 4 | 12 | 16 | 5.1 | M6 | 3.5 | 4 | 38 | 7 | 45 | 52 |
| **50** | 17 | 22 | 21 | 13 | 19 | 6 | 10.5 | 66.5 | 67.8 | G1/8 | M10 | M12x1.25 | 4.5 | 16 | 15.5 | 6.8 | M8 | 4 | 3 | 46.5 | 8 | 45 | 53 |

## DIMENSIONS OF DOUBLE-ACTING Ø 63 to 100 AND SINGLE-ACTING Ø 63 to 100

SE-DE MALE PISTON ROD

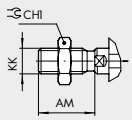


SE EXTENDED PISTON ROD

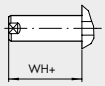


SE MALE EXTENDED PISTON ROD

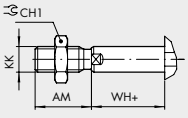


\+ = ADD THE STROKE
* = SECTION WITH TOLERANCE
1 = SENSOR SLOT
2 = SEAT FOR DIN 7984 SCREWS

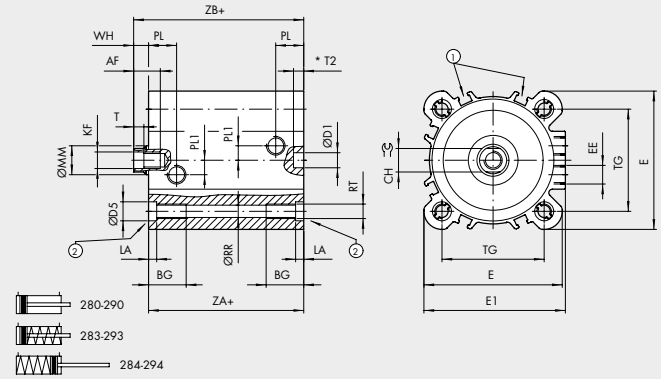


| Ø | AF | AM | BG | CH | CH1 | ØD1 H9 | ØD5 | E | E1 | EE | KF | KK | LA | ØMM | PL1 | PL | ØRR | RT | T | T2 | TG ±0.2 | WH | ZA 0 +0.4 | ZB |
|---|---|---|---|---|---|---|---|---|---|---|---|---|---|---|---|---|---|---|---|---|---|---|---|---|
| **63** | 17 | 22 | 21 | 13 | 19 | 8 | 10.5 | 76.5 | 78.3 | G1/8 | M10 | M12x1.25 | 4.5 | 16 | 8 | 15.5 | 6.8 | M8 | 4 | 3.5 | 56.5 | 8 | 49 | 57 |
| **80** | 22 | 28 | 22.5 | 17 | 24 | 8 | 14 | 95.5 | 95.5 | G1/8 | M12 | M16x1.5 | 5 | 20 | 14 | 16.5 | 8.5 | M10 | 5 | 4 | 72 | 10 | 54 | 64 |
| **100** | 24 | 28 | 25.5 | 22 | 30 | 8 | 14 | 114 | 114 | G1/8 | M12 | M16x1.5 | 5 | 25 | 19 | 19.2 | 8.5 | M10 | 5 | 4 | 89 | 10 | 67 | 77 |



RIEGLER & Co. KG
Schützenstraße 27
72574 Bad Urach
Tel. +49 7125 9497-642
technik@riegler.de



Subject to technical changes and errors reserved.
The proficiency testing is the responsibility of the user.
16.10.2026 The specified data do not represent legally guaranteed properties.

## DIMENSIONS OF THROUGH-ROD Ø 20 to 50

SE-DE MALE PERFORATED THROUGH-ROD

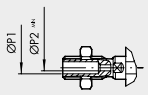


\+ = ADD THE STROKE
++ = ADD TWICE THE STROKE
1 = SENSOR SLOT
2 = SEAT FOR DIN 7984 SCREWS

SE-DE MALE PISTON ROD

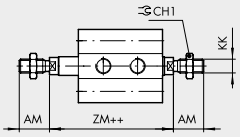


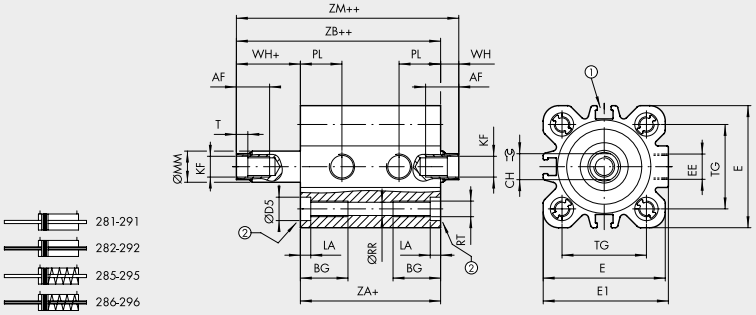


| Ø | AF | AM | BG | CH | CH1 | ØD5 | E | E1 | EE | KF | KK | LA | ØMM | ØP1 | ØP2 | PL | ØRR | RT | T | TG$^{\pm0.2}$ | WH | ZA$_0^{+0.3}$ | ZB | ZM |
|---|---|---|---|---|---|---|---|---|---|---|---|---|---|---|---|---|---|---|---|---|---|---|---|---|
| **20** | 14 | 16 | 17.5 | 8 | 13 | 7.5 | 35.5 | 36.5 | M5 | M6 | M8 | 4.2 | 10 | 3 | 1.5 | 12 | 4.2 | M5 | 2.5 | 22 | 6 | 37 | 43 | 49 |
| **25** | 14 | 16 | 17.5 | 8 | 13 | 7.5 | 39.5 | 40 | M5 | M6 | M8 | 4.2 | 10 | 3 | 1.5 | 13 | 4.2 | M5 | 2.5 | 26 | 6 | 39 | 45 | 51 |
| **32** | 16.5 | 19 | 21.5 | 10 | 17 | 9 | 47 | 48.2 | G1/8 | M8 | M10x1.25 | 4 | 12 | 4 | 2.5 | 16 | 5.1 | M6 | 3.5 | 32.5 | 7 | 44 | 51 | 58 |
| **40** | 16.5 | 19 | 21.5 | 10 | 17 | 9 | 55.5 | 56.5 | G1/8 | M8 | M10x1.25 | 4 | 12 | 4 | 2.5 | 16 | 5.1 | M6 | 3.5 | 38 | 7 | 45 | 52 | 59 |
| **50** | 17 | 22 | 21 | 13 | 19 | 10.5 | 66.5 | 67.8 | G1/8 | M10 | M12x1.25 | 4.5 | 16 | 6 | 4 | 15.5 | 6.8 | M8 | 4 | 46.5 | 8 | 45 | 53 | 61 |

## DIMENSIONS OF THROUGH-ROD Ø 63 to 100

SE-DE MALE PERFORATED THROUGH-ROD

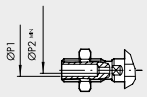


\+ = ADD THE STROKE
++ = ADD TWICE THE STROKE
1 = SENSOR SLOT
2 = SEAT FOR DIN 7984 SCREWS

SE-DE MALE PISTON ROD

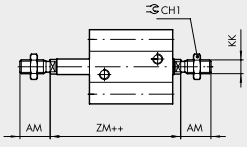


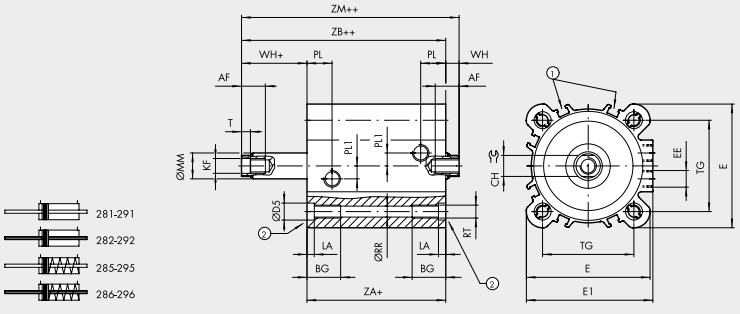


| Ø | AF | AM | BG | CH | CH1 | ØD5 | E | E1 | EE | KF | KK | LA | ØMM | ØP1 | ØP2 | PL1 | PL | ØRR | RT | T | TG$^{\pm0.2}$ | WH | ZA$_0^{+0.4}$ | ZB | ZM |
|---|---|---|---|---|---|---|---|---|---|---|---|---|---|---|---|---|---|---|---|---|---|---|---|---|---|
| **63** | 17 | 22 | 21 | 13 | 19 | 10.5 | 76.5 | 78.3 | G1/8 | M10 | M12x1.25 | 4.5 | 16 | 6 | 4 | 8 | 15.5 | 6.8 | M8 | 4 | 56.5 | 8 | 49 | 57 | 65 |
| **80** | 22 | 28 | 22.5 | 17 | 24 | 14 | 95.5 | 95.5 | G1/8 | M12 | M16x1.5 | 5 | 20 | G1/8 | 5 | 14 | 16.5 | 8.5 | M10 | 5 | 72 | 10 | 54 | 64 | 74 |
| **100** | 24 | 28 | 25.5 | 22 | 30 | 14 | 114 | 114 | G1/8 | M12 | M16x1.5 | 5 | 25 | G1/8 | 6 | 19 | 19.2 | 8.5 | M10 | 5 | 89 | 10 | 67 | 77 | 87 |



RIEGLER & Co. KG
Schützenstraße 27
72574 Bad Urach
Tel. +49 7125 9497-642
technik@riegler.de



Subject to technical changes and errors reserved.
The proficiency testing is the responsibility of the user.
16.10.2026 The specified data do not represent legally guaranteed properties.

## DIMENSIONS OF NON-ROTATING Ø 20 to 50

\+ = ADD THE STROKE
* = SECTION WITH TOLERANCE
1 = SENSOR SLOT
2 = SEAT FOR DIN 7984 SCREWS

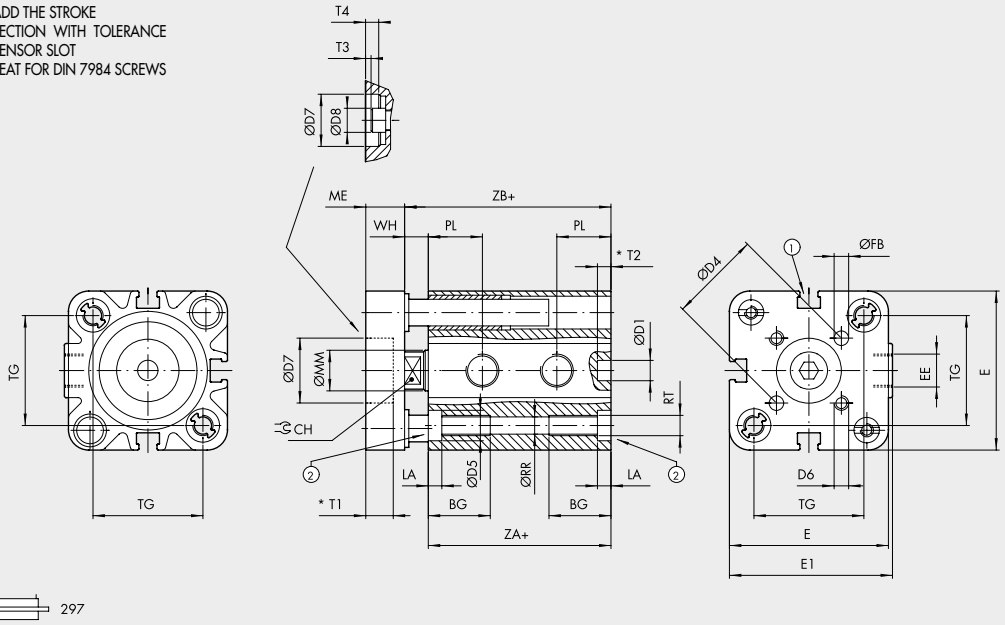


297

### NON-ROTATING FEMALE THROUGH-ROD

\+ = ADD THE STROKE
++ = ADD TWICE THE STROKE

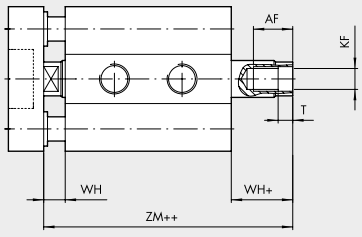


29A

### NON-ROTATING MALE THROUGH-ROD

\+ = ADD THE STROKE
++ = ADD TWICE THE STROKE

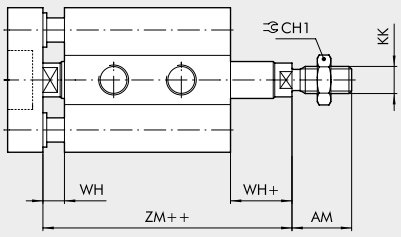


28A

| Ø | AF | AM | BG | CH | CH1 | ØD1 H9 | ØD4 | ØD5 | D6 | ØD7 H9 | ØD8 | E | E1 | EE | ØFB | KF | KK | LA | ME | ØMM | PL | ØRR | RT | T | T1 | T2 | T3 | T4 |
|---|---|---|---|---|---|---|---|---|---|---|---|---|---|---|---|---|---|---|---|---|---|---|---|---|---|---|---|---|
| **20** | 14 | 16 | 17.5 | 8 | 13 | 6 | 17 | 7.5 | M4 | - | - | 35.5 | 36.5 | M5 | 4 | M6 | M8 | 4.2 | 8 | 10 | 12 | 4.2 | M5 | 2.5 | - | 3 | - | - |
| **25** | 14 | 16 | 17.5 | 8 | 13 | 6 | 22 | 7.5 | M5 | 14 | 10 | 39.5 | 40 | M5 | 5 | M6 | M8 | 4.2 | 8 | 10 | 13 | 4.2 | M5 | 2.5 | 3.5 | 3.5 | 1 | 3.5 |
| **32** | 16.5 | 19 | 21.5 | 10 | 17 | 6 | 28 | 9 | M5 | 17 | 13 | 47 | 48.2 | G1/8 | 5 | M8 | M10x1.25 | 4 | 10 | 12 | 16 | 5.1 | M6 | 3.5 | 3.5 | 4 | 1 | 3.5 |
| **40** | 16.5 | 19 | 21.5 | 10 | 17 | 6 | 33 | 9 | M5 | 17 | 13 | 55.5 | 56.5 | G1/8 | 5 | M8 | M10x1.25 | 4 | 10 | 12 | 16 | 5.1 | M6 | 3.5 | 3.5 | 4 | 1 | 3.5 |
| **50** | 17 | 22 | 21 | 13 | 19 | 6 | 42 | 10.5 | M6 | 22 | 16 | 66.5 | 67.8 | G1/8 | 6 | M10 | M12x1.25 | 4.5 | 12 | 16 | 15.5 | 6.8 | M8 | 4 | 5 | 3 | 1.5 | 5 |

| Ø | TG ±0.2 | WH | ZA +0.3 0 | ZB | ZM |
|---|---|---|---|---|---|
| **20** | 22 | 6 | 37 | 43 | 49 |
| **25** | 26 | 6 | 39 | 45 | 51 |
| **32** | 32.5 | 7 | 44 | 51 | 58 |
| **40** | 38 | 7 | 45 | 52 | 59 |
| **50** | 46.5 | 8 | 45 | 53 | 61 |



RIEGLER & Co. KG
Schützenstraße 27
72574 Bad Urach
Tel. +49 7125 9497-642
technik@riegler.de



Subject to technical changes and errors reserved.
The proficiency testing is the responsibility of the user.
16.10.2026 The specified data do not represent legally guaranteed properties.

## DIMENSIONS OF NON-ROTATING Ø 63 to 100

\+ = ADD THE STROKE
* = SECTION WITH TOLERANCE
1 = SENSOR SLOT
2 = SEAT FOR DIN 7984 SCREWS

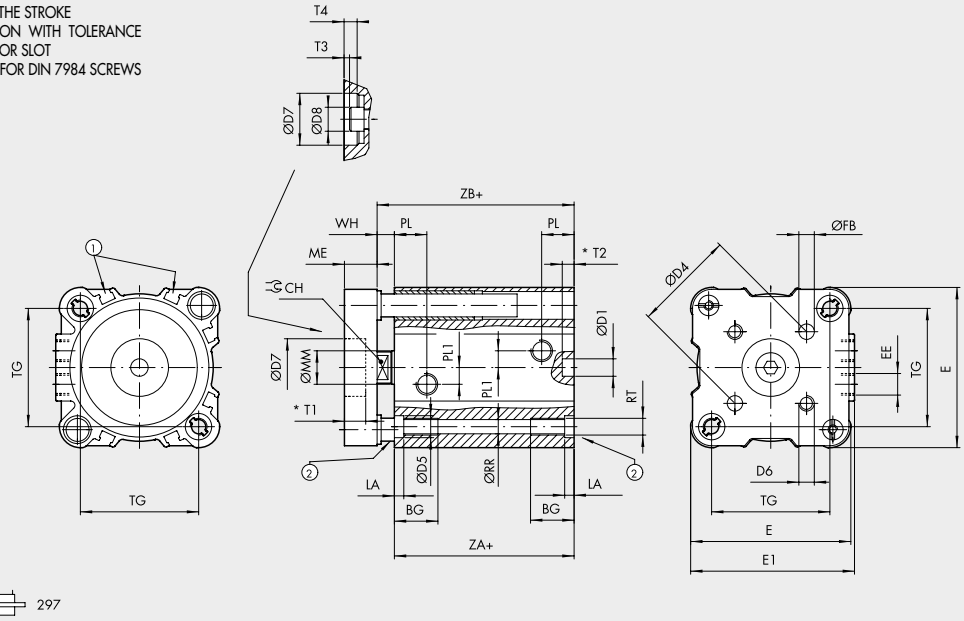


297

## NON-ROTATING FEMALE THROUGH-ROD

\+ = ADD THE STROKE
++ = ADD TWICE THE STROKE

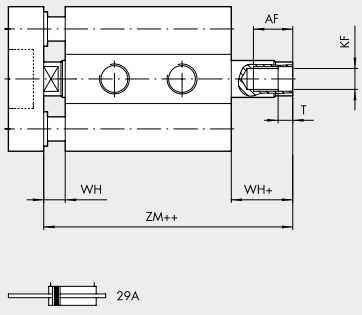


29A

## NON-ROTATING MALE THROUGH-ROD

\+ = ADD THE STROKE
++ = ADD TWICE THE STROKE

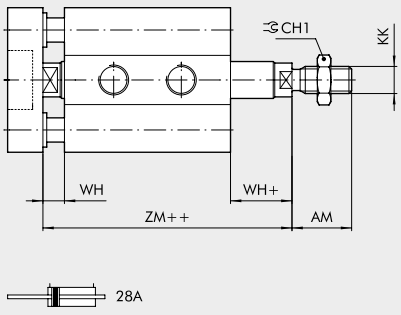


28A

| Ø | AF | AM | BG | CH | CH1 | ØD1 H9 | ØD4 | ØD5 | D6 | ØD7 H9 | ØD8 | E | E1 | EE | ØFB | KF | KK | LA | ME | ØMM | PL1 | PL | ØRR | RT | T | T1 | T2 | T3 |
|---|---|---|---|---|---|---|---|---|---|---|---|---|---|---|---|---|---|---|---|---|---|---|---|---|---|---|---|---|
| **63** | 17 | 22 | 21 | 13 | 19 | 8 | 50 | 10.5 | M6 | 22 | 16 | 76.5 | 78.3 | G1/8 | 6 | M10 | M12x1.25 | 4.5 | 12 | 16 | 8 | 15.5 | 6.8 | M8 | 4 | 5 | 3.5 | 1.5 |
| **80** | 22 | 28 | 22.5 | 17 | 24 | 8 | 65 | 14 | M8 | 24 | 18 | 95.5 | 95.5 | G1/8 | 8 | M12 | M16x1.5 | 5 | 14 | 20 | 14 | 16.5 | 8.5 | M10 | 5 | 7.5 | 4 | 3.5 |
| **100** | 24 | 28 | 25.5 | 22 | 30 | 8 | 80 | 14 | M10 | 24 | 18 | 114 | 114 | G1/8 | 10 | M12 | M16x1.5 | 5 | 14 | 25 | 19 | 19.2 | 8.5 | M10 | 5 | 7.5 | 4 | 3.5 |

| Ø | T4 | TG ±0.2 | WH | ZA 0 -0.4 | ZB | ZM |
|---|---|---|---|---|---|---|
| **63** | 5 | 56.5 | 8 | 49 | 57 | 65 |
| **80** | 7.5 | 72 | 10 | 54 | 64 | 74 |
| **100** | 7.5 | 89 | 10 | 67 | 77 | 87 |



RIEGLER & Co. KG
Schützenstraße 27
72574 Bad Urach
Tel. +49 7125 9497-642
technik@riegler.de



Subject to technical changes and errors reserved.
The proficiency testing is the responsibility of the user.
16.10.2026 The specified data do not represent legally guaranteed properties.

## KEY TO CODE

| CYL | 28 | 0 | 0 | 20 | 0 | 050 | X | P |
|---|---|---|---|---|---|---|---|---|
| | TYPE | | | BORE | | STROKE ** | MATERIAL | GASKETS |
| | **28** Compact cylinder ISO 21287 male piston rod<br>**29** Compact cylinder ISO 21287 female piston rod | **0** Double-acting<br>**1** Double-acting through-rod<br>**2** Double-acting through-rod perforated<br>● **3** Single-acting retracting piston rod<br>● **4** Single-acting extended piston rod<br>● **5** Single-acting through-rod<br>● **6** Single-acting through piston rod perforated<br>▼ **7** Double-acting non-rotating<br>**A** Double-acting through-rod non-rotating | **0** Magnetic<br>□ **S** Non-magnetic<br>▲ **G** No stick-slip | 20<br>25<br>32<br>40<br>50<br>63<br>80<br>◆ 100 | **0** Standard | | ✱ **C** C45 piston rod chromium-plated<br>▷ **X** Stainless steel piston rod and nut<br>◁ **A** C45 chromed piston rod, aluminium piston<br>○ **Z** Stainless steel piston rod and nut aluminium piston | **P** Polyurethane gaskets<br>▶ **V** FKM/FPM gaskets |

** For the maximum suppliabe stroke, see page **A1**.101
● Can also be used as double-acting with spring return
▼ For versions 29 only (female piston rod)
▲ For Ø 12 to 25 the standard version (0 or S) it's already No stick-slip
For Ø 20 to 100 version with gaskets in FKM / FPM (0 or S) is already "No stick-slip"
**For speeds lower than 0.2 m/s, to prevent surging. Use no-lubricated air only**
◆ In the code of cylinder with letter in fourth position Ø 100 becomes A1
▶ Only for standard double acting and standard through rod double acting version (for Ø20 and Ø25 only "non-magnetic" version provided)
□ Compulsory for Ø 20 and Ø 25 version Z
✱ Only for Ø 32 to 63 P version (Polyurethane gaskets)
▷ Only for Ø 20 to 63 P version (Polyurethane gaskets)
◁ Only for Ø 32 to 100 V version (FKM/FPM gaskets) and for Ø 80 and 100 P version (Polyurethane gaskets)
○ Only for Ø 20 to 100 V version (FKM/FPM gaskets) and for Ø 80 and 100 P version (Polyurethane gaskets)

## NOTES



RIEGLER & Co. KG
Schützenstraße 27
72574 Bad Urach
Tel. +49 7125 9497-642
technik@riegler.de



Subject to technical changes and errors reserved.
The proficiency testing is the responsibility of the user.
16.10.2026 The specified data do not represent legally guaranteed properties.

# ACCESSORIES FOR ISO 21287 CYLINDERS: FIXING



## FOOT - MODEL A

+ = ADD THE STROKE

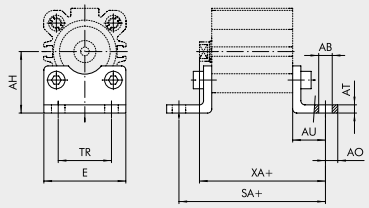


| Code | Ø | ØAB | AH | AO | AT | AU | E | SA | TR | XA | Weight [g] |
|---|---|---|---|---|---|---|---|---|---|---|---|
| W0950206001 | 20 | 6.6 | 27 | 6 | 4 | 16 | 36 | 69 | 22 | 59 | 46 |
| W0950256001 | 25 | 6.6 | 30* | 6 | 4 | 16 | 40 | 71 | 26 | 61 | 52 |
| W0950322001 | 32 | 7 | 32* | 11* | 4 | 24* | 45 | 92* | 32 | 75* | 76 |
| W0950402001 | 40 | 9 | 36* | 15* | 4 | 28* | 52 | 101* | 36 | 80* | 100 |
| W0950502001 | 50 | 9 | 45 | 15* | 5 | 32* | 65 | 109* | 45 | 85* | 162 |
| W0950632001 | 63 | 9 | 50 | 15* | 5 | 32* | 75 | 113* | 50 | 89* | 266 |
| W0950802001 | 80 | 12 | 63 | 20* | 6 | 41* | 95 | 136* | 63 | 105* | 456 |
| W0951002001 | 100 | 14 | 71* | 25* | 6 | 41* | 115 | 149* | 75 | 118* | 572 |

Note: Individually packed with 2 screws.
* **IMPORTANT:** Values not to ISO 21287. Cylinder pins to ISO 15552 are used.

## FEMALE HINGE-MODEL B

+ = ADD THE STROKE

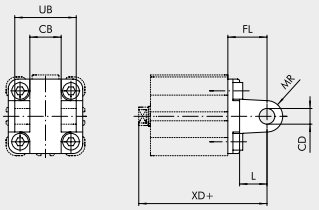


| Code | Ø | CB H14 | CD H9 | FL | L | MR | UB H14 | XD | Weight [g] |
|---|---|---|---|---|---|---|---|---|---|
| W0950322003 | 32 | 26 | 10 | 22 | 12 | 10 | 45 | 73 | 112 |
| W0950402003 | 40 | 28 | 12 | 25 | 15 | 12 | 52 | 77 | 159 |
| W0950502003 | 50 | 32 | 12 | 27 | 15 | 12 | 60 | 80 | 250 |
| W0950632003 | 63 | 40 | 16 | 32 | 20 | 16 | 70 | 89 | 390 |
| W0950802003 | 80 | 50 | 16 | 36 | 20 | 16 | 90 | 100 | 668 |
| W0951002003 | 100 | 60 | 20 | 41 | 25 | 20 | 110 | 118 | 1047 |

Note: Supplied with 4 screws, 4 washers, 2 snap-rings and 1 pin

## MALE HINGE-MODEL BA

+ = ADD THE STROKE

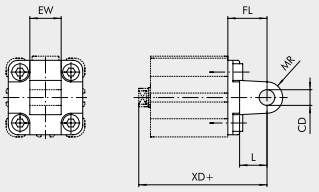


| Code | Ø | CD H9 | EW | FL | L | MR | XD | Weight [g] |
|---|---|---|---|---|---|---|---|---|
| W0950206004 | 20 | 8 | 16 | 20 | 12 | 8 | 63 | 44 |
| W0950256004 | 25 | 8 | 16 | 20 | 12 | 8 | 65 | 48 |
| W0950322004 | 32 | 10 | 26 | 22 | 13 | 10 | 73 | 94 |
| W0950402004 | 40 | 12 | 28 | 25 | 16 | 12 | 77 | 124 |
| W0950502004 | 50 | 12 | 32 | 27 | 16 | 12 | 80 | 220 |
| W0950632004 | 63 | 16 | 40 | 32 | 22 | 16 | 89 | 316 |
| W0950802004 | 80 | 16 | 50 | 36 | 22 | 16 | 100 | 578 |
| W0951002004 | 100 | 20 | 60 | 41 | 27 | 20 | 118 | 850 |

Note: Supplied with 4 screws.

## FLANGE Ø 20 to 25 - MODEL C (FRONT AND REAR)

+ = ADD THE STROKE

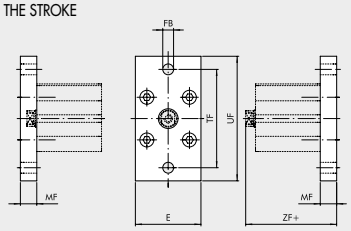


| Code | Ø | E | ØFB | MF | TF | UF | ZF | Weight [g] |
|---|---|---|---|---|---|---|---|---|
| W0950206002 | 20 | 36 | 6.6 | 10* | 55 | 70 | 53* | 184 |
| W0950256002 | 25 | 40 | 6.6 | 10* | 60 | 76 | 55* | 226 |

Note: Supplied with 4 screws.
* **IMPORTANT:** Non ISO 21287 norm fixing distance

## FLANGE Ø 32 to 100 - MODEL C (FRONT AND REAR)

+ = ADD THE STROKE

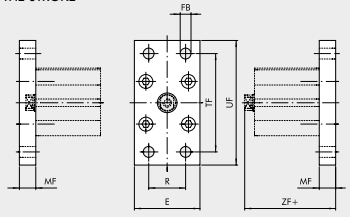


| Code | Ø | E | ØFB | MF | R | TF | UF | ZF | Weight [g] |
|---|---|---|---|---|---|---|---|---|---|
| W0950322002 | 32 | 50 | 7 | 10 | 32 | 64 | 80 | 61 | 246 |
| W0950402002 | 40 | 55 | 9 | 10 | 36 | 72 | 90 | 62 | 290 |
| W0950502002 | 50 | 65 | 9 | 12 | 45 | 90 | 110 | 65 | 522 |
| W0950632002 | 63 | 75 | 9 | 12 | 50 | 100 | 120 | 69 | 670 |
| W0950802002 | 80 | 95 | 12 | 15 | 63 | 126 | 150 | 80 | 1420 |
| W0951002002 | 100 | 115 | 14 | 15 | 75 | 150 | 178 | 93 | 2040 |

Note: Supplied with 4 screws.



RIEGLER & Co. KG
Schützenstraße 27
72574 Bad Urach
Tel. +49 7125 9497-642
technik@riegler.de



Subject to technical changes and errors reserved.
The proficiency testing is the responsibility of the user.
16.10.2026 The specified data do not represent legally guaranteed properties.

## ARTICULATED MALE HINGE - MODEL BAS

+ = ADD THE STROKE

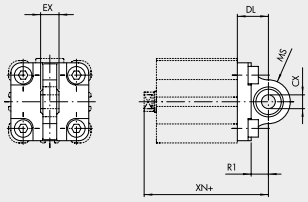


| Code | Ø | CX H9 | DL | EX | MS | R1 | XN | Weight [g] |
|---|---|---|---|---|---|---|---|---|
| W0950322006 | 32 | 10 | 22 | 14 | 16 | 12 | 73 | 106 |
| W0950402006 | 40 | 12 | 25 | 16 | 18 | 15 | 77 | 142 |
| W0950502006 | 50 | 12 | 27 | 16 | 21 | 19 | 80 | 236 |
| W0950632006 | 63 | 16 | 32 | 21 | 23 | 20 | 89 | 336 |
| W0950802006 | 80 | 16 | 36 | 21 | 28 | 24 | 100 | 572 |
| W0951002006 | 100 | 20 | 41 | 25 | 30 | 25 | 118 | 840 |

Note: Supplied with 4 screws, 4 washers

## FLANGE FOR OPPOSITE CYLINDERS

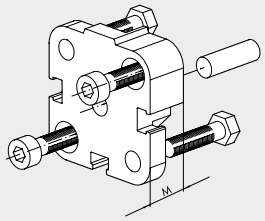


| Code | Ø | M | Weight [g] |
|---|---|---|---|
| 0950203060 | 20 | 12.5 | 45 |
| 0950253060 | 25 | 13 | 57 |
| 0950323060 | 32 | 14.5 | 88 |
| 0950403061 | 40 | 14.5 | 106 |
| 0950503061 | 50 | 14.5 | 158 |
| 0950633061 | 63 | 14.5 | 258 |
| 0950803061 | 80 | 16.5 | 452 |
| 0951003061 | 100 | 19.5 | 801 |

Note: Supplied complete with 1 pin, 4 screws

ASSEMBLING OPPOSING CYLINDERS

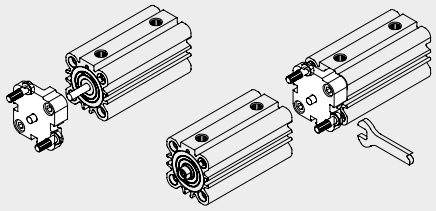

## FORK - MODEL GK-M

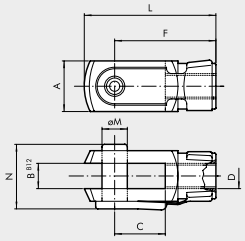


| Code | Ø | A | B | C | D | F | L | øM | N | Weight [g] |
|---|---|---|---|---|---|---|---|---|---|---|
| W0950200020 | 20 | 16 | 8 | 16 | M8 | 32 | 42 | 8 | 22 | 48 |
| W0950200020 | 25 | 16 | 8 | 16 | M8 | 32 | 42 | 8 | 22 | 48 |
| W0950322020 | 32 | 20 | 10 | 20 | M10x1.25 | 40 | 52 | 10 | 26 | 92 |
| W0950322020 | 40 | 20 | 10 | 20 | M10x1.25 | 40 | 52 | 10 | 26 | 92 |
| W0950402020 | 50 | 24 | 12 | 24 | M12x1.25 | 48 | 62 | 12 | 32 | 148 |
| W0950402020 | 63 | 24 | 12 | 24 | M12x1.25 | 48 | 62 | 12 | 32 | 148 |
| W0950502020 | 80 | 32 | 16 | 32 | M16x1.5 | 64 | 83 | 16 | 40 | 340 |
| W0950502020 | 100 | 32 | 16 | 32 | M16x1.5 | 64 | 83 | 16 | 40 | 340 |

Note: Individually packed

## ROD EYE - MODEL GA-M

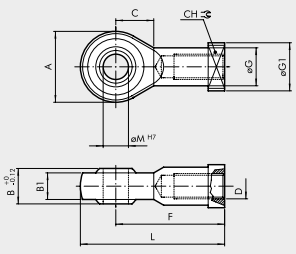


| Code | Ø | A | B | B1 | C | CH | D | F | øG | øG1 | L | øM | Weight [g] |
|---|---|---|---|---|---|---|---|---|---|---|---|---|---|
| W0950200025 | 20 | 24 | 12 | 9 | 13 | 14 | M8 | 36 | 12.5 | 16 | 48 | 8 | 45 |
| W0950200025 | 25 | 24 | 12 | 9 | 13 | 14 | M8 | 36 | 12.5 | 16 | 48 | 8 | 45 |
| W0950322025 | 32 | 28 | 14 | 10.5 | 15 | 17 | M10x1.25 | 43 | 15 | 19 | 57 | 10 | 70 |
| W0950322025 | 40 | 28 | 14 | 10.5 | 15 | 17 | M10x1.25 | 43 | 15 | 19 | 57 | 10 | 70 |
| W0950402025 | 50 | 32 | 16 | 12 | 17 | 19 | M12x1.25 | 50 | 17.5 | 22 | 66.5 | 12 | 108 |
| W0950402025 | 63 | 32 | 16 | 12 | 17 | 19 | M12x1.25 | 50 | 17.5 | 22 | 66.5 | 12 | 108 |
| W0950502025 | 80 | 42 | 21 | 15 | 22 | 22 | M16x1.5 | 64 | 22 | 27 | 85 | 16 | 216 |
| W0950502025 | 100 | 42 | 21 | 15 | 22 | 22 | M16x1.5 | 64 | 22 | 27 | 85 | 16 | 216 |

Note: Individually packed



RIEGLER & Co. KG
Schützenstraße 27
72574 Bad Urach
Tel. +49 7125 9497-642
technik@riegler.de



Subject to technical changes and errors reserved.
The proficiency testing is the responsibility of the user.
16.10.2026 The specified data do not represent legally guaranteed properties.

## COMPENSATION JOINT - MODEL GA

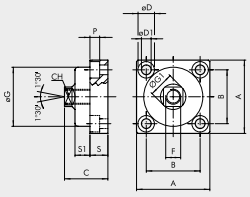

| Code | Ø | A | B | C | CH | øD | øD1 | F | øG | ØG1 | P | S | S1 | Weight [g] |
|---|---|---|---|---|---|---|---|---|---|---|---|---|---|---|
| W0950326021 | 32 | 49 | 36 | 30 | 13 | 11 | 6.5 | M10x1.25 | 39.5 | 17 | 6.5 | 12 | 10 | 172 |
| W0950326021 | 40 | 49 | 36 | 30 | 13 | 11 | 6.5 | M10x1.25 | 39.5 | 17 | 6.5 | 12 | 10 | 172 |
| W0950406021 | 50 | 59 | 42 | 36 | 15 | 14 | 8.5 | M12x1.25 | 44 | 19 | 8.5 | 15 | 13.5 | 286 |
| W0950406021 | 63 | 59 | 42 | 36 | 15 | 14 | 8.5 | M12x1.25 | 44 | 19 | 8.5 | 15 | 13.5 | 286 |
| W0950506021 | 80 | 79 | 58 | 44 | 22 | 17 | 10.5 | M16x1.5 | 59 | 26 | 10.5 | 20 | 15 | 628 |
| W0950506021 | 100 | 79 | 58 | 44 | 22 | 17 | 10.5 | M16x1.5 | 59 | 26 | 10.5 | 20 | 15 | 628 |

Note: Individually packed

## COUNTER-HINGE CETOP Ø 32 to 100

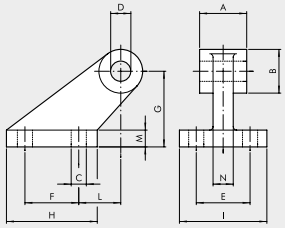

| Code | Ø | A | B | C | D | E | F | G | H | I | L | M | N | Weight [g] |
|---|---|---|---|---|---|---|---|---|---|---|---|---|---|---|
| W0950322008 | 32 | 26 | 19 | 7 | 10 | 25 | 20 | 32 | 37 | 41 | 18 | 8 | 10 | 96 |
| W0950402008 | 40 | 28 | 26 | 9 | 12 | 32 | 32 | 45 | 54 | 52 | 25 | 10 | 12 | 216 |
| W0950502008 | 50 | 32 | 26 | 9 | 12 | 32 | 32 | 45 | 54 | 52 | 25 | 10 | 12 | 212 |
| W0950632008 | 63 | 40 | 33 | 11 | 16 | 40 | 50 | 63 | 75 | 63 | 32 | 12 | 15 | 440 |
| W0950802008 | 80 | 50 | 33 | 11 | 16 | 40 | 50 | 63 | 75 | 63 | 32 | 12 | 15 | 464 |
| W0951002008 | 100 | 60 | 44 | 14 | 20 | 50 | 70 | 90 | 103 | 80 | 40 | 16 | 22 | 985 |

Note: Supplied complete with 4 screws, 4 washers

## COUNTER-HINGE Ø 16 to 25 - MODEL BC

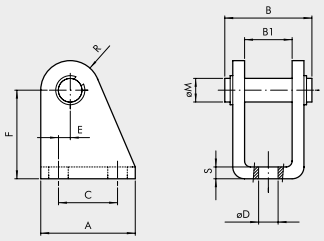

| Code | Ø | A | B | B1 | C | øD | E | F | øM | R | S | Weight [g] |
|---|---|---|---|---|---|---|---|---|---|---|---|---|
| W0950200005 | 20 | 32 | 30 | 16 | 20 | 6.5 | 4 | 30 | 8 | 10 | 4 | 78 |
| W0950200005 | 25 | 32 | 30 | 16 | 20 | 6.5 | 4 | 30 | 8 | 10 | 4 | 78 |

Note: Supplied complete with 1 pin and and 2 snap rings

## SELF ALIGNING ROD COUPLER - MODEL GA-K

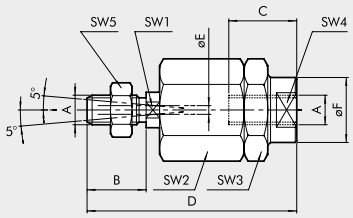

| Code | Ø | A | B | C | D | øE | øF | SW1 | SW2 | SW3 | SW4 | SW5 | Weight [g] |
|---|---|---|---|---|---|---|---|---|---|---|---|---|---|
| W0950200030 | 20 | M8 | 20 | 20 | 57 | 4 | 12.5 | 7 | 17 | 17 | 11 | 13 | 56 |
| W0950200030 | 25 | M8 | 20 | 20 | 57 | 4 | 12.5 | 7 | 17 | 17 | 11 | 13 | 56 |
| W0950322030 | 32 | M10x1.25 | 20 | 20 | 71 | 4 | 22 | 12 | 30 | 30 | 19 | 17 | 216 |
| W0950322030 | 40 | M10x1.25 | 20 | 20 | 71 | 4 | 22 | 12 | 30 | 30 | 19 | 17 | 216 |
| W0950402030 | 50 | M12x1.25 | 24 | 20 | 75 | 4 | 22 | 12 | 30 | 30 | 19 | 19 | 220 |
| W0950402030 | 63 | M12x1.25 | 24 | 20 | 75 | 4 | 22 | 12 | 30 | 30 | 19 | 19 | 220 |
| W0950502030 | 80 | M16x1.5 | 32 | 32 | 103 | 4 | 32 | 20 | 41 | 41 | 30 | 24 | 620 |
| W0950502030 | 100 | M16x1.5 | 32 | 32 | 103 | 4 | 32 | 20 | 41 | 41 | 30 | 24 | 620 |

Note: Individually packed

## RETRACTABLE SENSOR

For codes and technical data, see **chapter A6**.

**SENSOR, SQUARE TYPE**
Latest generation,
secure fixing

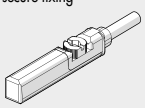

**SENSOR, OVAL TYPE**
Traditional

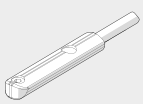





RIEGLER & Co. KG
Schützenstraße 27
72574 Bad Urach
Tel. +49 7125 9497-642
technik@riegler.de



Subject to technical changes and errors reserved.
The proficiency testing is the responsibility of the user.
16.10.2026 The specified data do not represent legally guaranteed properties.

## POSITION SENSORS

LTS

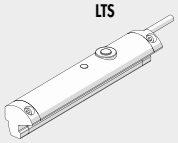

For technical data and usage strokes see **chapter A6**.

# SPARE PARTS FOR ISO 21287 CYLINDER

## COMPACT CYLINDERS ISO 21287 (POLYURETHANE)

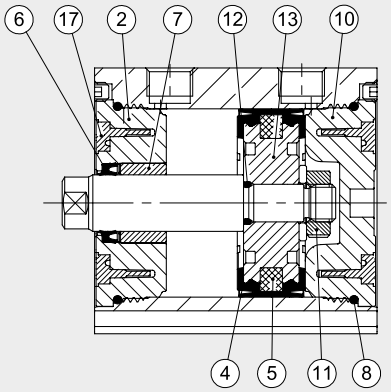


| Code | Bores | Type | Parts |
|---|---|---|---|
| **009 . . . L001** | Ø 20, 25 | Complete set of gaskets polyurethane | ④⑥⑧ |
| **009 . . . L001** | Ø 32 to 63 | Complete set of gaskets polyurethane | ④⑥⑧⑫⑰ |
| **009 . . . L001** | Ø 80, 100 | Complete set of gaskets polyurethane | ④⑥⑧⑫ |
| **009 . . . L008** | Ø 20, 25 | Complete set of (high temperature) FKM/FPM gaskets | ④⑥⑧ |
| **009 . . . L008** | Ø 32 to 63 | Complete set of (high temperature) FKM/FPM gaskets | ④⑥⑧⑫⑰ |
| **009 . . . L008** | Ø 80, 100 | Complete set of (high temperature) FKM/FPM gaskets | ④⑥⑧⑫ |
| **009 . . . 7013** | Ø 20 to 100 | Polyurethane piston rod gasket kit | ⑥ |
| **009 . . . 7014** | Ø 20 to 100 | FKM/FPM piston rod gasket kit | ⑥ |
| **009 . . . L101** | Ø 20, 25, 80, 100 | Front head kit | ②⑥⑦⑧ |
| **009 . . . L101** | Ø 32 to 63 | Front head kit | ②⑥⑦⑧⑰ |
| **009 . . . L201** | Ø 20, 25, 80, 100 | Rear head kit | ⑧⑩ |
| **009 . . . L201** | Ø 32 to 63 | Rear head kit | ⑧⑩⑰ |
| **009 . . . 7401** | Ø 20, 25 | Piston kit polyurethane | ④⑤⑪ |
| **009 . . . L401** | Ø 32 to 63 | Piston kit polyurethane | ④⑤⑪⑫⑬⑰ |
| **009 . . . 7401** | Ø 80 to 100 | Piston kit polyurethane | ④⑤⑪⑫⑬ |



RIEGLER & Co. KG
Schützenstraße 27
72574 Bad Urach
Tel. +49 7125 9497-642
technik@riegler.de



Subject to technical changes and errors reserved.
The proficiency testing is the responsibility of the user.
16.10.2026 The specified data do not represent legally guaranteed properties.

## Accessories

| | Art. No. | Type No. |
|---|---|---|
| Foot fastening, ISO 15552, for compact cylinder, Standard cylinder, Piston Ø 50, 1 piece with 2 screws | 106127 | 450.13-M |
| Counter bearing CETOP, for ISO 15552 and ISO 21287, Ø50, with 4 screws | 106139 | 437.25-M |
| Front or floor flange, ISO 15552, ISO 21287, Piston Ø 50, with 4 screws | 106161 | 450.030-M |
| Threaded plate for the T-nut, for compact cylinder, Standard cylinder, Threaded plate M4 | 106168 | 235.11-M |
| Threaded plate for the T-nut, for compact cylinder, Standard cylinder, Threaded plate M3 | 106169 | 235.12-M |
| Threaded plate for the T-nut, for compact cylinder, Standard cylinder, Threaded plate M3/ M4 | 125522 | 235.05-M |
| Female hinge model, ISO 15552, ISO 21287, Ø50, 4 screws, 1 bolt and retainer | 156660 | 453.003 |
| Female hinge model with bushes, ISO 15552, ISO 21287, Ø50, 4 screws, 1 bolt and retainer | 156671 | 453.014 |
| Female hinge model for articulated male hinge model, ISO 15552, ISO 21287, Ø50, 4 screws, 1 bolt and retainer | 156682 | 453.025 |
| Male hinge model, ISO 15552, ISO 21287, Ø50, with 4 screws | 156703 | 453.046 |
| Male hinge model with bushes, ISO 15552, ISO 21287, Ø50, with 4 screws | 156714 | 453.057 |
| Counter-hinge model CETOP RP107P, for ISO 15552 and ISO 21287, Ø50, without screws | 156725 | 453.068 |
| Articulated male hinge model, ISO 15552, ISO 21287, Ø50, with 4 screws | 156745 | 453.088 |
| Angle flange, ISO 15552, ISO 21287, Ø50, 1 piece with 4 screws | 156756 | 453.099 |
| REED sensor for the T-slots and rectangular slots, for all cylinders except short stroke cylinders, 2-wire, with 2.5 m cable, LED | 194356 | 235.03-M-1 |
| REED sensor for the T-slots and rectangular slots, for all cylinders except short stroke cylinders, 2-wire, M8(3-pole), LED, 300mm | 194357 | 235.04-M-1 |
| HALL sensor for the T-slots and rectangular slots, for all cylinders except short stroke cylinders, 3-wire, 2.5 m cable, PNP, LED | 194358 | 235.06-M-1 |
| HALL sensor for the T-slots and rectangular slots, for all cylinders except short stroke cylinders,3wire, M8(3-pole),PNP,LED,300mm | 194359 | 235.07-M-1 |
| Counter-hinge model CETOP RP107P, round cyl. (not ISO6432) Ø40,ISO21287 Ø50-63,ISO15552 Ø40, f.fork model DIN71752, without screws | 156734 | 453.077 |

## Spareparts

| | Art. No. | Type No. |
|---|---|---|
| Seal set (wear part), for compact cylinder, Piston Ø 50, PU seal | 106174 | 235.19-M |



Subject to technical changes and errors reserved.
The proficiency testing is the responsibility of the user.
16.10.2026 The specified data do not represent legally guaranteed properties.