Proportional precision pressure regulator

REGTRONIC 300 series

MAX

Art. No. **153040**

Type No. **4402412A**

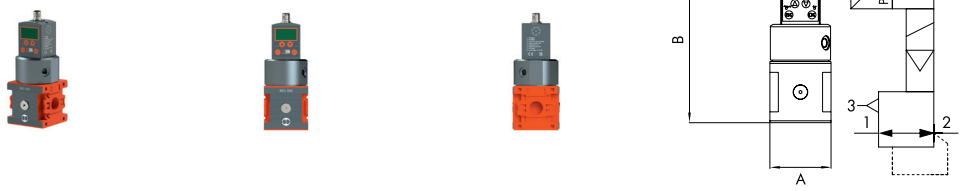

Exemplary illustration

Proportional precision pressure regulators series REGTRONIC have the job of precisely regulating the pressure in a system, the variables depending on the input command. Remote control regulators are controlled by means of an M12x1 cable and connector and can have Volt, mA, RS232 control or via IO-Link. Regulators with a display can be controlled via a cable or directly using the keys below the display. Pressure control takes place in a 'closed loop' with an electronic precision pressure sensor that measures the downstream pressure, a control system that compares it with the desired pressure, and two mini solenoid valves that adjust the pressure to reach the target value.

Advantages:

- All analogue versions come with the comprehensive, simple and intuitive MWRegtronic programming and reading software. This software can be used to set the parameters. It can be downloaded from the website www.metalwork.eu. To connect the PC to REGTRONIC, use the PC connection cable article no. 153061.

- The version with display can show a wide range of information and diagnostics. The user interface with the display, LEDs and buttons are all on one side.

- The wireless versions can communicate with Ethernet networks via the MQTT protocol and with mobile devices via Bluetooth® using the dedicated 'Metal Work RegUp' app.

- The REGTRONIC 300 / REGTRONIC 400 series can be combined at will with the SKILLAIR FRL units.

Technical data

Series	REGTRONIC 300
Version	analogue
Analogue output	4 - 20 mA
Display	with
Input signal	0 - 5 V DC / 0 - 10 V DC / 4 - 20 mA / RS 232 / keyboard

RIEGLER & Co. KG
Schützenstraße 27
72574 Bad Urach
Tel. +49 7125 9497-642
technik@riegler.de

Subject to technical changes and errors reserved.
The proficiency testing is the responsibility of the user.
07.10.2026 The specified data do not represent legally guaranteed properties.

Technical data

Thread	without end plates
Electrical connection	M12 male connector, 8-pin
Medium	filtered, unlubricated compressed air, max. particle size 10 µm, free of condensate
Control range	0,05 - 10 bar
Min. input pressure	pressure to be regulated +1 bar
Max. input pressure	11 bar
Temperature range	0 to 50 °C
Flow rate measurement 1	flow rate at 6.3 bar and Δ_p 0.5 bar
Flow rate 1	4500 Nl/min
Flow rate measurement 2	flow rate at 6.3 bar and Δ_p 1 bar
Flow rate 2	7000 Nl/min
Digital output	PNP / NPN
Hysteresis	±0,2 % (full scale)
Repeatability	±0.2 % (full scale)
Sensitivity/dead-band	adjustment range: 10 - 300 mbar
Display - accuracy	±0.3 % (full scale)
Display - unit of measurement	bar, MPa, psi
Display - minimum resolution	0.01 bar / 0.001 MPa / 0.01 psi
Analog output accuracy	±0.1 % (full scale)
Temperature characteristics	max. 2 mbar / °C
Supply voltage range	12 -10 % to 24 +30 % V DC
Operating voltage min.	10.8 V DC
Operating voltage max.	31.2 V DC
Max. admissible voltage	32 V DC*
Current consumption	max. 220 mA at 12 V DC
WiFi	without
Compatible with app	no
Mounting position	any
Housing	aluminium
Protection IP	IP 65
A	65.0 mm
B	174.5 mm

*IMPORTANT! Voltages above 32 V DC will cause irreparable damage to the system.

Commercial data

Customs tariff number	84811099
Country of origin	IT
eCl@ss 5.1.4	27292301
eCl@ss 9.0	27292301
UNSPSC_Code_v190501	40141603
UNSPSC_CodeDesc_v190501	Pneumatic valves

RIEGLER & Co. KG
Schützenstraße 27
72574 Bad Urach
Tel. +49 7125 9497-642
technik@riegler.de

Subject to technical changes and errors reserved.
The proficiency testing is the responsibility of the user.
07.10.2026 The specified data do not represent legally guaranteed properties.

Material informations

REACH SVHC1 substance name	lead
CAS no. SVHC 1	7439-92-1
RoHS materials notice	RoHS compliant
REACH Info	contains SVHC substance

RIEGLER & Co. KG
Schützenstraße 27
72574 Bad Urach
Tel. +49 7125 9497-642
technik@riegler.de

Subject to technical changes and errors reserved.
The proficiency testing is the responsibility of the user.
07.10.2026 The specified data do not represent legally guaranteed properties.

PROPORTIONAL PRECISION PRESSURE REGULATOR REGTRONIC SERIES

Proportional pressure regulators series REGTRONIC have the job of precisely regulating the pressure in a system, the variables depending on the input command. Remote control regulators are controlled by means of an M12x1 cable and connector and can have Volt, mA, RS232 control or via IO-Link. Regulators with a display can be controlled via a cable or directly using the keys below the display. The pressure value and a series of information and diagnostics are visible at all times on the graphic display. The user-display interface, LEDs and buttons are all on one side. The programming and reading software is comprehensive, simple and intuitive. Pressure control takes place in a "closed-loop" with an electronic precision pressure sensor that measures the downstream pressure, a control system that compares it with the desired pressure, and two mini solenoid valves that adjust the pressure to reach the target value. Through the dedicated "Metal Work RegUp" App, the wireless versions can communicate with Ethernet networks (via MQTT protocol) and mobile devices (smartphones and tablets) via Bluetooth®. Through this App it is possible to view and modify the regulated pressure in real time , set all the operating parameters and view the pressure trend graphs.

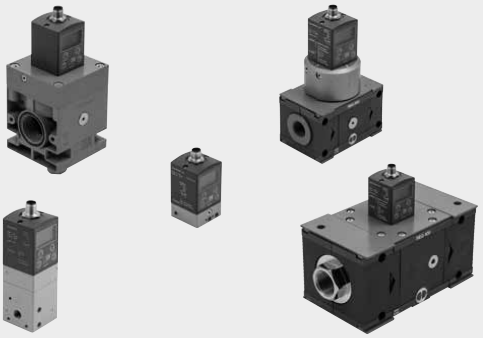

TECHNICAL DATA		REGTRONIC					REGTRONIC NEW DEAL		REGTRONIC 300			REGTRONIC 400			
Threaded port		M5	1/8"		1/4"		3/4"	1"	1/2"	3/4"	1"	1"	1 ¼"	1 ½"	2"
Fluid		Filtered, unlubricated air.													
		The air must be filtered at least 10 µm and without condensation.													
MIN inlet pressure	bar	Regulation pressure + 1 bar													
MAX inlet pressure	bar	11													
Temperature range	°C	from 0 to 50													
Pressure regulation range	bar	from 0.05 to 10 (settable full scale and minimum pressure)													
Flow rate at 6.3 bar ΔP 0.5	Nl/min	10	1300		1500		10000		4500			18000			20000
Flow rate at 6.3 bar ΔP 1	Nl/min	10	1450		1700		13000		7000			-			-
Exhaust flow rate at 6.3 bar with 0.1 bar overpressure	Nl/min	2	600		1300		1800		250			400			400
Exhaust flow rate at 6.3 bar with 0.5 bar overpressure	Nl/min	9	1000		1500		2000		500			850			850
Response time with ΔP =1 bar	Volume [cc]	100	100	1000	100	1000	1000		1000			1000			1000
from 6 to 7 bar	s	0.5	0.1	0.15	0.1	0.15	0.27		0.25			0.2			0.2
from 7 to 6 bar	s	0.55	0.1	0.15	0.1	0.15	0.27		0.33			0.35			0.35
Weight	kg	0.2	0.38		0.38		1.3		1.5			5			5.8
Class of protection		IP 65													
Supply voltage range IO-Link version	VDC	from 18 to 30													
Current absorption		Max 150 mA at 18VDC													
Supply voltage range analog version	VDC	12 -10% 24 +30%													
Minimum operating voltage	VDC	10.8													
Maximum operating voltage	VDC	31.2													
Maximum admissible voltage	VDC	32 *													
Current absorption		max 220 mA at 12VDC													
Input signal (input impedence)	Voltage	0 to 5 VDC, 0 to 10 VDC (approx. 6.3 KΩ)													
	Current	4 to 20 mA (approx. 100 Ω)													
	Serial ports	RS 232													
	Manual	Keypad													
Output signal	Analog version voltage	0 to 10 VDC (1 VDC = 1 bar) - 1 mA max													
	Analog version current	4 to 20 mA (4 mA = 0 bar, 20 mA = 10 bar)													
	Digital	PNP open collector output: max 24VDC 60 mA													
		NPN open collector output: max 24VDC 60 mA													
Hysteresis		± 0.2% (Full scale)													
Repeatability		± 0.2% (Full scale)													
Sensitivity/Dead-band		setting range 10 to 300 mbar													
Output pressure (display and keyboard version)	Accuracy	± 0.3% (Full scale)													
	Unit of measurement	bar, MPa, psi													
	Minimum resolution	0.01 bar - 0.001 MPa - 0.01 psi													
Analog output accuracy		± 0.1% of the reading													
Temperature characteristics		max 2 mbar / °C													
Installation position		In any position													
Notes		The features shown refer to the static condition only. With air consumption on the output side, the pressure may vary. **On all anolog versions you can set the parameters using the software "MWRegtronic" downloadable from the website www.metalwork.eu; to connect the PC to Regtronic you can use the cable code W0970513019.**													

*** IMPORTANT! Voltage greater than 32VDC will damage the system irreparably.**

RIEGLER & Co. KG
Schützenstraße 27
72574 Bad Urach
Tel. +49 7125 9497-642
technik@riegler.de

Subject to technical changes and errors reserved.
The proficiency testing is the responsibility of the user.
07.10.2026 The specified data do not represent legally guaranteed properties.

REMOTE-CONTROL VERSION



The remote-control version of the Regtronic has two diagnostic LEDs.

DISPLAY AND KEYBOARD VERSION



The display version also has buttons for entering the various parameters.

PROGRAMMABLE AND FLEXIBLE

Setting options:

- LANGUAGE
- UNIT OF MEASUREMENT
- TYPE OF INPUT
- TYPE OF DIGITAL OUTPUT
- DEAD-BAND
- FULL SCALE
- MINIMUM PRESSURE

PRECISION

Linearity
± 0.5 % (full scale)

Hysteresis
± 0.2 % (full scale)

Repeatability
± 0.2 % (full scale)

Sensitivity
range 10 to 300 mbar

IO-Link CONNECTOR 5-PIN M12x1

IO-Link



Pin	Signal	Description of Class A Port	Lead colour
1	L+	+24 VDC power supply	Brown
2	NC	/	White
3	L -	0 VDC power supply	Blue
4	C/Q	IO-Link communication	Black
5	NC	/	Gray

ANALOG CONNECTOR 8-PIN M12x1



Pin	Signal	Description	Lead colour
1	TX	RS232	White
2	RX	RS232	Brown
3	Pressure set	0 to 10 VDC / 0 to 5 VDC / 4 to 20 mA	Green
4	Digital out	NPN	Yellow
5	Analog out	Voltage version 0 to10 VDC	Gray
		Current version 4 to 20 mA	
6	Digital out	PNP	Pink
7	0 VDC	Power supply	Blue
8	+ VDC	Power supply	Red

FUNCTION DIAGRAM

REGTRONIC M5

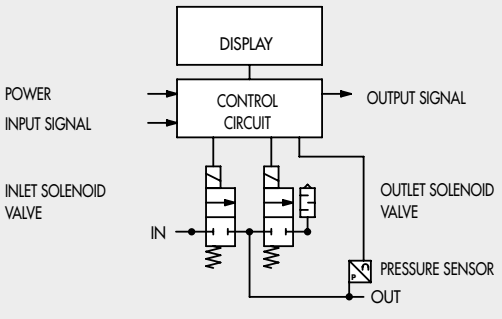

REGTRONIC 1/8" - 1/4" - SK300 - SK400 - NEW DEAL

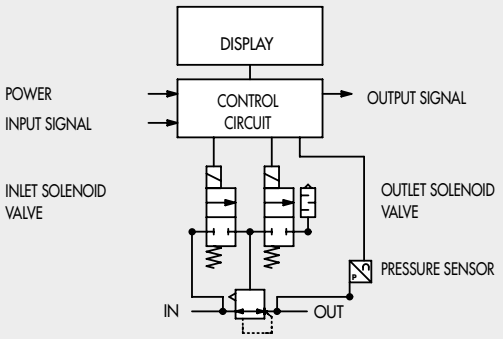

RIEGLER & Co. KG
Schützenstraße 27
72574 Bad Urach
Tel. +49 7125 9497-642
technik@riegler.de

Subject to technical changes and errors reserved.
The proficiency testing is the responsibility of the user.
07.10.2026 The specified data do not represent legally guaranteed properties.

REGTRONIC 300



COMPONENTS

① BODY: tecnopolymer
② END PLATE: zamak
③ STEM: OT58 brass
④ UPPER CUP: aluminium
⑤ PISTON: OT58 brass
⑥ CUP: aluminium
⑦ PRESSURE SENSOR
⑧ SOLENOID VALVE: 10 mm series PLT-10
⑨ SHELL: tecnopolymer
⑩ CONNECTOR M12
⑪ ELECTRONIC BOARDS
⑫ GASKET: NBR
⑬ VALVE WITH NBR VULCANIZED GASKET
⑭ VALVE SPRING: stainless steel
⑮ LOWER CUP: tecnopolymer

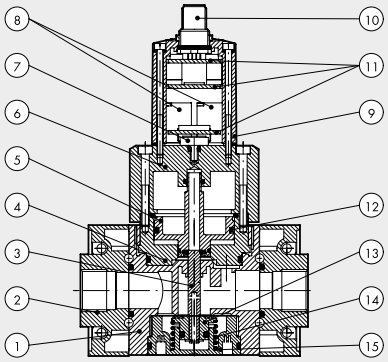

FLOW CHARTS

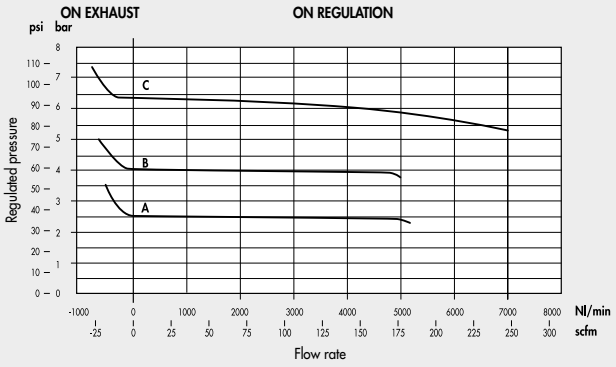

A = 2.5 bar B = 4 bar C = 6.3 bar Pm = 10 bar

DIMENSIONS

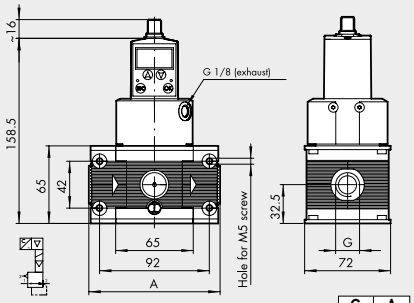

G	A
1/2"	110
3/4"	110
1"	112

ORDERING CODES

Code	Description
4402012A	REGTRONIC 300 with dispaly and keyboard without end plates OUT 0-10 V
4402013A	REGTRONIC 300 remote control without end plates OUT 0-10 V
4402012	REGTRONIC 300 1/2 with dispaly and keyboard OUT 0-10 V
4402013	REGTRONIC 300 1/2 remote control OUT 0-10 V
4502012	REGTRONIC 300 3/4 with dispaly and keyboard OUT 0-10 V
4502013	REGTRONIC 300 3/4 remote control OUT 0-10 V
4602012	REGTRONIC 300 1 with dispaly and keyboard OUT 0-10 V
4602013	REGTRONIC 300 1 remote control OUT 0-10 V
4402412A	REGTRONIC 300 with dispaly and keyboard without end plates OUT 4-20 mA
4402413A	REGTRONIC 300 remote control without end plates OUT 4-20 mA
4402412	REGTRONIC 300 1/2 with dispaly and keyboard OUT 4-20 mA
4402413	REGTRONIC 300 1/2 remote control OUT 4-20 mA
4502412	REGTRONIC 300 3/4 with dispaly and keyboard OUT 4-20 mA
4502413	REGTRONIC 300 3/4 remote control OUT 4-20 mA
4602412	REGTRONIC 300 1 with dispaly and keyboard OUT 4-20 mA
4602413	REGTRONIC 300 1 remote control OUT 4-20 mA
4402312A	REGTRONIC IO-Link 300 with dispaly and keyboard without end plates
4402313A	REGTRONIC IO-Link 300 remote control without end plates
4402312	REGTRONIC IO-Link 300 1/2 with dispaly and keyboard
4402313	REGTRONIC IO-Link 300 1/2 remote control
4502312	REGTRONIC IO-Link 300 3/4 with dispaly and keyboard
4502313	REGTRONIC IO-Link 300 3/4 remote control
4602312	REGTRONIC IO-Link 300 1 with dispaly and keyboard
4602313	REGTRONIC IO-Link 300 1 remote control

ACCESSORIES

INPUT/OUTPUT END PLATE KIT FOR SKILLAIR

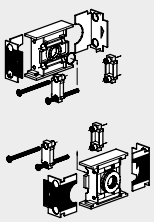

Code	Description
9430701	IN/OUT end plates kit 300 1/2
9530901	IN/OUT end plates kit 300 3/4
9531001	IN/OUT end plates kit 300 1

CONNECTOR KIT FOR SKILLAIR CODE A

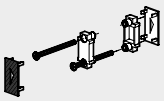

Code	Description
9430301	Connector kit 300

RIEGLER & Co. KG
Schützenstraße 27
72574 Bad Urach
Tel. +49 7125 9497-642
technik@riegler.de

Subject to technical changes and errors reserved.
The proficiency testing is the responsibility of the user.
07.10.2026 The specified data do not represent legally guaranteed properties.

ACCESSORIES REGTRONIC

ANALOG VERSION

CONNECTOR M12x1, 8-PIN, A-CODED, FEMALE, STRAIGHT

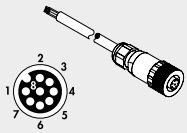

Code	Description
W0970513010	Connector M12x1, 8-pin, A-coded, female, straight, with cable L = 5 m

Note: can only be used for analog version

Pin	Cable color
1	White
2	Brown
3	Green
4	Yellow
5	Grey
6	Pink
7	Blue
8	Red

CONNECTOR M12x1, 8-PIN, A-CODED, FEMALE, 90°, WITH CABLE

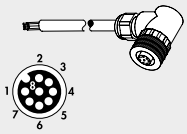

Code	Description
W0970513011	Connector M12x1, 8-pin, A-coded, female, 90°, with cable L = 5 m

Note: can only be used for analog version

Pin	Cable color
1	White
2	Brown
3	Green
4	Yellow
5	Grey
6	Pink
7	Blue
8	Red

CONFIGURATION CABLE

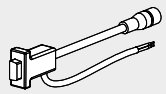

Code	Description
W0970513019	Configuration cable Regtronic

The cable consists of:
- M12 8-PIN female connector to be connected to Regtronic
- RS232 serial connector to be connected to PC
- 2 wires to supply 24VDC power

The package also includes a RS232-USB adapter

Note: can only be used for analog version

NOTES

IO-Link VERSION

CONNECTOR M12x1, 5-PIN, A-CODED, FEMALE, STRAIGHT

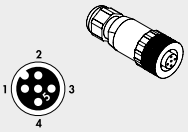

Code	Description
W0970513001	Connector M12x1, 5-pin, A-coded, female, straight

Note: can only be used for version IO-Link

CONNECTOR M12x1, 5-PIN, A-CODED, FEMALE, STRAIGHT

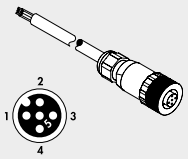

Code	Description
W0970513002	Connector M12x1, 5-pin, A-coded, female, straight, with cable L = 5 m

Note: can only be used for version IO-Link

Pin	Cable color
1	Brown
2	White
3	Blue
4	Black
5	Gray

CONNECTOR M12x1, 5-PIN, A-CODED, FEMALE, 90°



Code	Description
W0970513003	Connector M12x1, 5-pin, A-coded, female, 90°

Note: can only be used for version IO-Link

CONNECTOR M12x1, 5-PIN, A-CODED, FEMALE, 90°, WITH CABLE

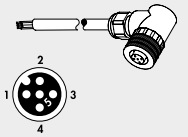

Code	Description
W0970513004	Connector M12x1, 5-pin, A-coded, female, 90°, with cable L = 5 m

Note: can only be used for version IO-Link

Pin	Cable color
1	Brown
2	White
3	Blue
4	Black
5	Gray

RIEGLER & Co. KG
Schützenstraße 27
72574 Bad Urach
Tel. +49 7125 9497-642
technik@riegler.de

Subject to technical changes and errors reserved.
The proficiency testing is the responsibility of the user.
07.10.2026 The specified data do not represent legally guaranteed properties.

Accessories

	Art. No.	Type No.
IN end plate and OUT end plate, for proportional prec. pressure regulator series REGTRONIC 300 / SKILLAIR 300, G 1/2	153052	9430701
IN end plate and OUT end plate, for proportional prec. pressure regulator series REGTRONIC 300 / SKILLAIR 300, G 3/4	153053	9530901
IN end plate and OUT end plate, for proportional prec. pressure regulator series REGTRONIC 300 / SKILLAIR 300, G 1	153054	9531001
Connection cable, M12 connector female straight / open ended wires, 8-pin, A-coded, 8-wire, length 5 m	153059	W0970513010
Connection cable, M12 connector female 90° / open ended wires, 8-pin, A-coded, 8-wire, length 5 m	153060	W0970513011
PC-connection cable for REGTRONIC, RS232 CONN female / M12 CONN female 0°, 2 wires to supply 24 VDC power, incl. RS232-USB adapter	153061	W0970513019

RIEGLER & Co. KG
Schützenstraße 27
72574 Bad Urach
Tel. +49 7125 9497-642
technik@riegler.de

Subject to technical changes and errors reserved.
The proficiency testing is the responsibility of the user.
07.10.2026 The specified data do not represent legally guaranteed properties.