2-way stainless steel ball valve

with electric actuator

STAINLESS STEEL

Art. No. **192553**

Type No. **KHES.34.BK.2T.EA.30-48**

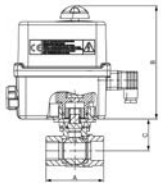

Exemplary illustration

The Type 8804 electrical ball valve consists of an electrical rotary actuator and a 2/2-way or 3/2-way ball valve made of stainless steel. 2-way variants are available with a 2-part or 3-part ball valve for a wide range of applications. The 3-way ball valves are available in L-bore and T-bore variants. The electrical rotary actuator has a compact construction. Heat resistors and torque limiters are standard. The housing is made of hardly inflammable material, classified according to UL 94 V0.

The 3/2-way variants are available on request only.

Technical data

Housing	PA 6.6 / nylon
Material	stainless steel 1.4408
Ball seal	PTFE
Stem seal	FKM
Max. operating pressure	100 bar
Operating temperature	-10 to 55 °C
Position indicator	visual position indicator on the manual override
Actuating time	7 sec.
Duty cycle	50 %
Protection IP	IP 66 (with connector socket fitted)
Voltage	30 - 48 V AC, 50 - 60 Hz / 12 - 48 V DC
Standard thread	DIN EN 10226 - 1
Thread	Rp 3/4
DN	20 mm
A	80.0 mm
B	176.3 mm
C	41.0 mm
Mounting flange	ISO 5211

RIEGLER & Co. KG
Schützenstraße 27
72574 Bad Urach
Tel. +49 7125 9497-642
technik@riegler.de

Subject to technical changes and errors reserved.
The proficiency testing is the responsibility of the user.
07.10.2026 The specified data do not represent legally guaranteed properties.

Commercial data

Customs tariff number	84818081
Country of origin	DE
eCl@ss 5.1.4	37011005
eCl@ss 9.0	37011005
UNSPSC_Code_v190501	40141607
UNSPSC_CodeDesc_v190501	Ball valves

RIEGLER & Co. KG
Schützenstraße 27
72574 Bad Urach
Tel. +49 7125 9497-642
technik@riegler.de

Subject to technical changes and errors reserved.
The proficiency testing is the responsibility of the user.
07.10.2026 The specified data do not represent legally guaranteed properties.

Ball valve / butterfly valve with electrical rotary actuator

- High flow rates
- Actuator with adjustable limit switches
- Visual position indicator
- Manual override as standard

Product variants described in the data sheet may differ from the product presentation and description.

Can be combined with

Type description

The Type 8804 electrical ball valve consists of an electrical rotary actuator and a 2/2-way or 3/2-way ball valve made of stainless steel. 2-way variants are available with a 2-part or 3-part ball valve for a wide range of applications. The 3-way ball valves are available in L-bore and T-bore variants. The electrical rotary actuator has a compact construction. It can also be used as single device for the operation of other control elements (see Type 3003 data sheet). Heat resistors and torque limiters are standard. The housing is made of hardly inflammable material, classified according to UL 94 V0.

DTS 1000082140 EN Version: AB Status: RL (released | freigegeben | validé) printed: 18.12.2024

Standard | EU | en | 2024-12-03 | 25
© Christian Bürkert GmbH & Co. KG, Subject to alteration

Visit product website

RIEGLER & Co. KG
Schützenstraße 27
72574 Bad Urach
Tel. +49 7125 9497-642
technik@riegler.de

Subject to technical changes and errors reserved.
The proficiency testing is the responsibility of the user.
07.10.2026 The specified data do not represent legally guaranteed properties.

Table of contents

1. General technical data 3

2. Approvals and conformities 3

2.1. General notes 3
2.2. Conformity 3
2.3. Standards 4

3. Materials 4

3.1. Bürkert resistApp 4

4. Dimensions 5

4.1. 2-piece ball valve 5
4.2. 3-piece ball valve 6

5. Device / Process connections 7

5.1. Connection details 7
Variant with analogue signal input 8

6. Performance specifications 9

6.1. Pressure temperature diagram for stainless steel ball valves 9

7. Ordering information 9

7.1. Bürkert eShop 9
7.2. Bürkert product filter 9
7.3. Ordering chart 10
7.4. Ordering chart accessories 11
Reducing sleeves 11
Replacement battery for actuators with electronic emergency reset function 11

DTS 1000082140 EN Version: AB Status: RL (released | freigegeben | validé) printed: 18.12.2024

RIEGLER & Co. KG
Schützenstraße 27
72574 Bad Urach
Tel. +49 7125 9497-642
technik@riegler.de

Subject to technical changes and errors reserved.
The proficiency testing is the responsibility of the user.
07.10.2026 The specified data do not represent legally guaranteed properties.

1. General technical data

Product characteristics	
Dimensions	Further information can be found in chapter "4. Dimensions" on page 5.
Material	
Seal	PTFE
Body	Stainless steel 1.4408/316
Material of electrical actuator	
Cover	Nylon
Body	PA 6.6
Axis	Stainless steel
Screws	Stainless steel
Gear	Stainless steel, PC
Performance data	
Rotation angle	90° (± 5°)
Rotation time	Further information can be found in chapter "7.3. Ordering chart" on page 10.
Limit switches	4 adjustable (2 for the motor and 2 additional ones for feedback) Max. 250 V AC/5 A
Electrical data	
Operating voltage	15...30 V AC 50...60 Hz, 12...48 V DC. 100...240 V AC 50...60 Hz, 100...350 V DC
Voltage tolerance	± 10 % At 12...48 V DC, the operating voltage must not drop below 11.5 V.
Duty cycle	According to IEC34, S4 = 50 %
Medium data	
Medium temperature	Depending on the used ball valve and the medium pressure, see "6.1. Pressure temperature diagram for stainless steel ball valves" on page 9.
Process/Port connection & communication	
Electrical connection	Cable plug according to EN 175301 - 803 (supply voltage) included Cable glands according to ISO M20
Port connection	Rp ¼"...Rp 2½" Whitworth thread according to DIN EN 10226 - 1 (old DIN 2999) Welded connection (on request)
Armature-side resp. actuator-side interface	Flange according to ISO 5211
Approvals and conformities	
Degree of protection	IP66 if mounted with cable plug
Environment and installation	
Installation position	Do not install the actuator upside down, maximum installation angle: 90°.
Ambient temperature	
For Type 3003 Standard actuator	- 10 °C...+ 55 °C
For Type 3003 actuator with electronic emergency reset	- 10 °C...+ 40 °C

2. Approvals and conformities

2.1. General notes

- The approvals and conformities listed below must be stated when making enquiries. This is the only way to ensure that the product complies with all required specifications.
- Not all available variants can be supplied with the below mentioned approvals or conformities.

2.2. Conformity

In accordance with the Declaration of Conformity, the product is compliant with the EU Directives.

DTS 1000082140 EN Version: AB Status: RL (released | freigegeben | validé) printed: 18.12.2024

RIEGLER & Co. KG
Schützenstraße 27
72574 Bad Urach
Tel. +49 7125 9497-642
technik@riegler.de

Subject to technical changes and errors reserved.
The proficiency testing is the responsibility of the user.
07.10.2026 The specified data do not represent legally guaranteed properties.

2.3. Standards

The applied standards which are used to demonstrate compliance with the EU Directives are listed in the EU-Type Examination Certificate and/or the EU Declaration of Conformity.

3. Materials

3.1. Bürkert resistApp

Bürkert resistApp – Chemical resistance chart

You want to ensure the reliability and durability of the materials in your individual application case? Verify your combination of media and materials on our website or in our resistApp.

Start chemical resistance check

DTS 1000082140 EN Version: AB Status: RL (released | freigegeben | validé) printed: 18.12.2024

RIEGLER & Co. KG
Schützenstraße 27
72574 Bad Urach
Tel. +49 7125 9497-642
technik@riegler.de

Subject to technical changes and errors reserved.
The proficiency testing is the responsibility of the user.
07.10.2026 The specified data do not represent legally guaranteed properties.

4. Dimensions

4.1. 2-piece ball valve

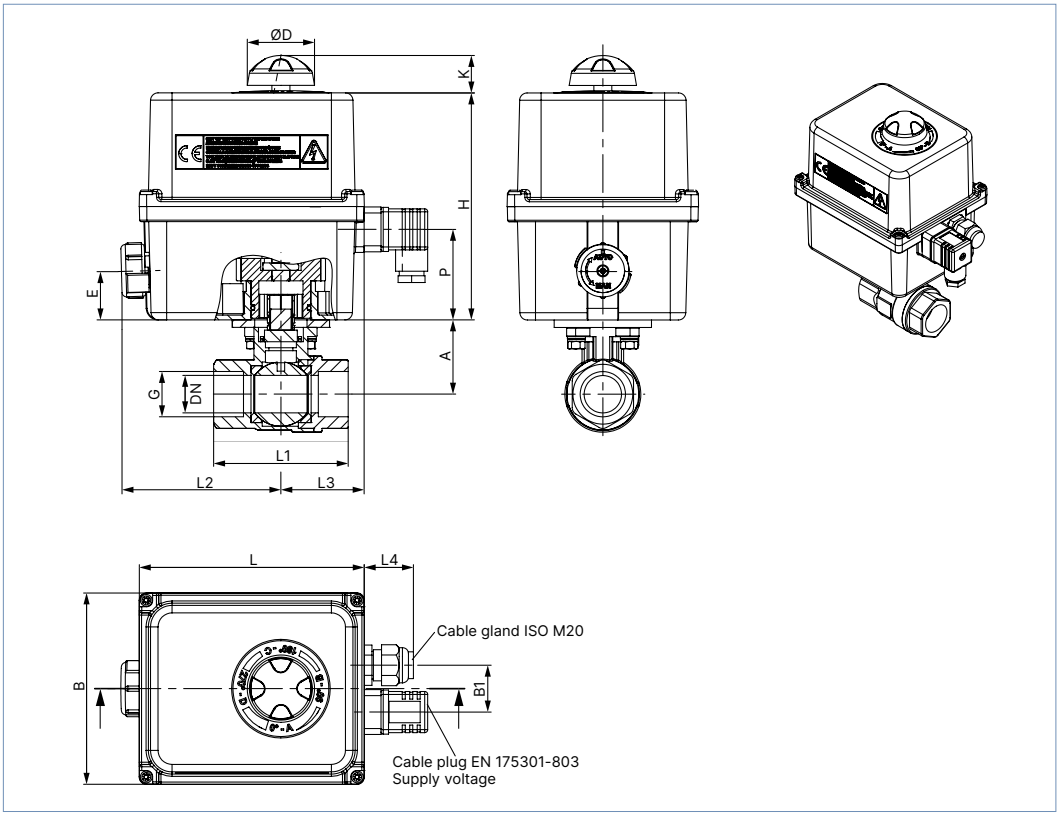

Actuator	DN	Port connection	A	B	B1	Ø D	E	H	K	L	L1	L2	L3	L4	P
[Nm]		[inch]	[mm]	[mm]	[mm]	[mm]	[mm]	[mm]	[mm]	[mm]	[mm]	[mm]	[mm]	[mm]	[mm]
20	10	¼	33.2	91.7	30.0	37.1	23.5	123.7	24.5	136.5	50	103.6	45.4	29.7	47
	13	⅜	33.2								60				
	15	½	35								75				
	20	¾	41								80				
35...100	10	¼	44.2	127.7	31.3	37.1	32.5	150.8	25.5	150.3	50	106.3	55.7	29.7	60.5
	13	⅜	44.2								60				
	15	½	46								75				
	20	¾	41								80				
	25	1	44.5								90				
	32	1¼	49.5								110				
	40	1½	55								120				
	50	2	66.5								140				
	65	2½	101								185				

DTS 1000082140 EN Version: AB Status: RL (released | freigegeben | validé) printed: 18.12.2024

RIEGLER & Co. KG
Schützenstraße 27
72574 Bad Urach
Tel. +49 7125 9497-642
technik@riegler.de

Subject to technical changes and errors reserved.
The proficiency testing is the responsibility of the user.
07.10.2026 The specified data do not represent legally guaranteed properties.

4.2. 3-piece ball valve

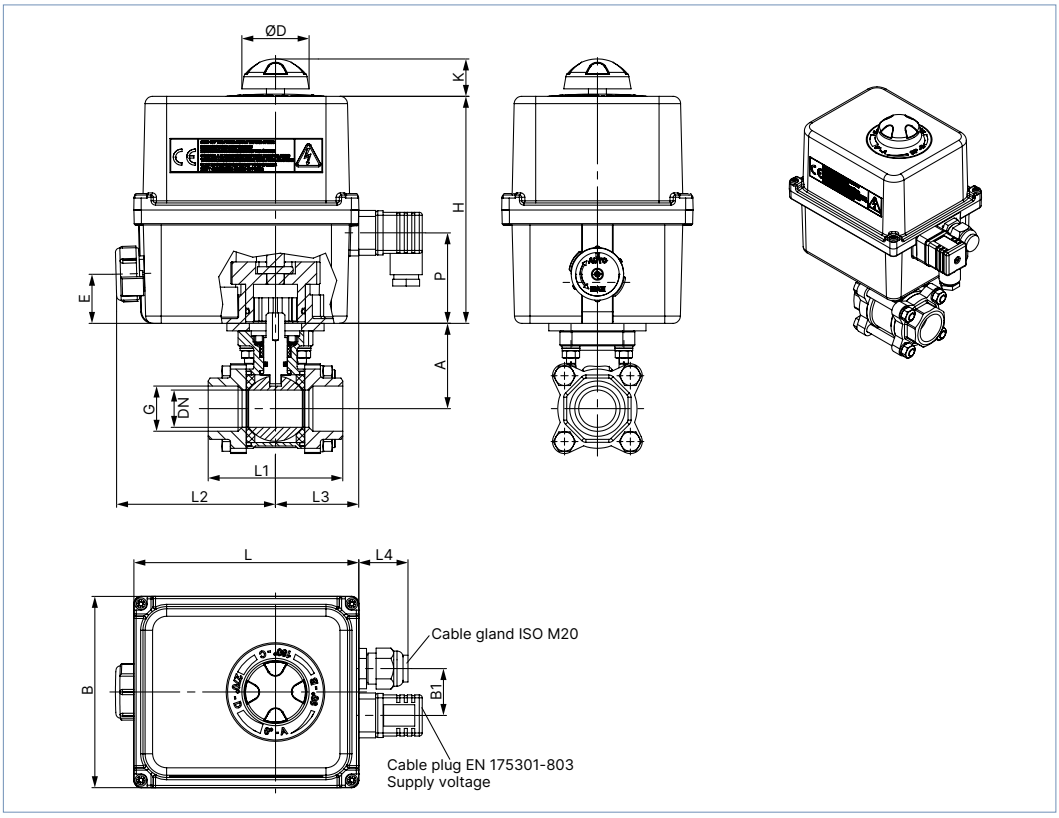

Actuator	DN	Port connection	A	B	B1	Ø D	E	H	K	L	L1	L2	L3	L4	P
[Nm]		[inch]	[mm]	[mm]	[mm]	[mm]	[mm]	[mm]	[mm]	[mm]	[mm]	[mm]	[mm]	[mm]	[mm]
20	10	¼	40	91.7	30	37.1	23.5	123.7	24.5	136.5	65	103.6	45.4	29.7	47
	12	⅜													
	15	½									75				
	20	¾	44								80				
35...100	10	¼	40	127.7	31.3	37.1	32.5	150.8	25.5	150.3	65	106.3	55.7	29.7	60.5
	12	⅜													
	15	½									75				
	20	¾	44								80				
	25	1	52								90				
	32	1¼	58								110				
	40	1½	68								120				
	50	2	77								140				
	65	2½	98								185				

DTS 1000082140 EN Version: AB Status: RL (released | freigegeben | validé) printed: 18.12.2024

RIEGLER & Co. KG
Schützenstraße 27
72574 Bad Urach
Tel. +49 7125 9497-642
technik@riegler.de

Subject to technical changes and errors reserved.
The proficiency testing is the responsibility of the user.
07.10.2026 The specified data do not represent legally guaranteed properties.

5. Device / Process connections

5.1. Connection details

On/Off variant

3-point mode	On/Off mode	Feedback
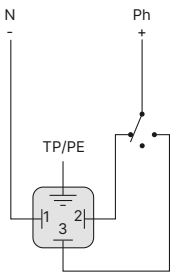	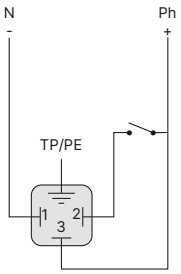	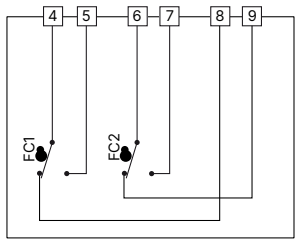

Symbol	Description
FCO	Limit switch OPEN
FCF	Limit switch CLOSED
FC1	Auxiliary limit switch 1
FC2	Auxiliary limit switch 2

DTS 1000082140 EN Version: AB Status: RL (released | freigegeben | validé) printed: 18.12.2024

RIEGLER & Co. KG
Schützenstraße 27
72574 Bad Urach
Tel. +49 7125 9497-642
technik@riegler.de

Subject to technical changes and errors reserved.
The proficiency testing is the responsibility of the user.
07.10.2026 The specified data do not represent legally guaranteed properties.

Variant with analogue signal input

Note:

- The resolution of the closed-loop control mode is 1°.
- The input resistance for control 0...10 V is 10 kΩ.
- The input resistance for control 0...20 mA/4...20 mA is 100 Ω.

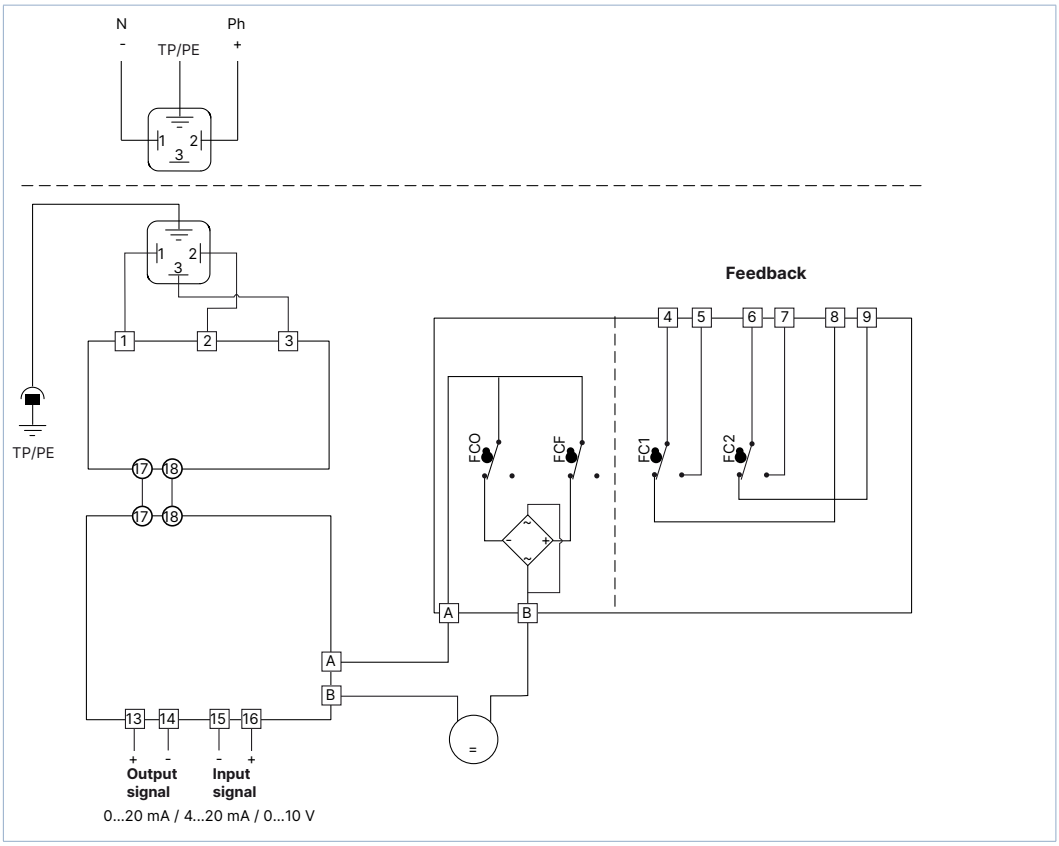

Symbol	Description
FCO	Limit switch OPEN
FCF	Limit switch CLOSED
FC1	Auxiliary limit switch 1
FC2	Auxiliary limit switch 2

DTS 1000082140 EN Version: AB Status: RL (released | freigegeben | validé) printed: 18.12.2024

RIEGLER & Co. KG
Schützenstraße 27
72574 Bad Urach
Tel. +49 7125 9497-642
technik@riegler.de

Subject to technical changes and errors reserved.
The proficiency testing is the responsibility of the user.
07.10.2026 The specified data do not represent legally guaranteed properties.

6. Performance specifications

6.1. Pressure temperature diagram for stainless steel ball valves

Note:
The temperature limit values of the actuators are usually lower than those of the valves. Therefore it has to be ensured that the temperature limits of other system components (like actuators) are not exceeded due to possible heat radiation from the medium.

For general industrial use

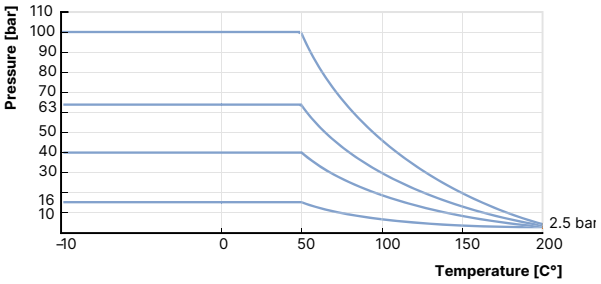

7. Ordering information

7.1. Bürkert eShop

Bürkert eShop – Easy ordering and quick delivery

You want to find your desired Bürkert product or spare part quickly and order directly? Our online shop is available for you 24/7. Sign up and enjoy all the benefits.

Order online now

7.2. Bürkert product filter

Bürkert product filter – Get quickly to the right product

You want to select products comfortably based on your technical requirements?
Use the Bürkert product filter and find suitable articles for your application quickly and easily.

Try out our product filter

RIEGLER & Co. KG
Schützenstraße 27
72574 Bad Urach
Tel. +49 7125 9497-642
technik@riegler.de

Subject to technical changes and errors reserved.
The proficiency testing is the responsibility of the user.
07.10.2026 The specified data do not represent legally guaranteed properties.

DTS 1000082140 EN Version: AB Status: RL (released | freigegeben | validé) printed: 18.12.2024

7.3. Ordering chart

Nominal diameter	Port connection Ø	K_V value	Pressure range	90° rotation time	Actuator	Voltage [1.)]	Article no. 2-piece
	[inch]	[m³/h]	[bar]	[s]	[Nm]		
10	¼	7	0...100	12	20	100...240 V AC, 50...60 Hz, 100...350 V DC	226466
12.7	⅜	9	0...100	12	20		226468
15	½	19	0...100	12	20		226469
20	¾	46	0...100	7	35		226470
25	1	72	0...100	7	35		226471
32	1¼	105	0...100	12	60		226472
40	1½	170	0...100	23	100		226473
10	¼	7	0...100	12	20	15...30 V AC, 50...60 Hz, 12...48 V DC	226475
12.7	⅜	9	0...100	12	20		226476
15	½	19	0...100	12	20		226477
20	¾	46	0...100	7	35		226478
25	1	72	0...100	7	35		226479
32	1¼	105	0...100	12	60		226480
40	1½	170	0...100	23	100		226481

1.) At 12...48 V DC, the operating voltage must not drop below 11.5 V.

Nominal diameter	Port connection Ø	K_V value	Pressure range	90° rotation time	Actuator	Voltage [1.)]	Article no. 3-piece
	[inch]	[m³/h]	[bar]	[s]	[Nm]		
10	¼	7	0...63	12	20	100...240 V AC, 50...60 Hz, 100...350 V DC	226483
12.7	⅜	9	0...63	12	20		226484
15	½	19	0...63	12	20		226485
20	¾	46	0...63	12	20		226486
25	1	72	0...63	7	35		226487
32	1¼	105	0...63	7	35		226488
40	1½	170	0...63	12	60		241107
50	2	275	0...63	12	60		226490
10	¼	7	0...63	12	20	15...30 V AC, 50...60 Hz, 12...48 V DC	226496
12.7	⅜	9	0...63	12	20		226497
15	½	19	0...63	12	20		226498
20	¾	46	0...63	12	20		226499
25	1	72	0...63	7	35		226500
32	1¼	105	0...63	7	35		225945
40	1½	170	0...63	12	60		241109
50	2	275	0...63	12	60		226502

1.) At 12...48 V DC, the operating voltage must not drop below 11.5 V.

Further variants on request

Additional
- Position controller with standard signal input 4...20 mA or 0...10 V
- Feedback via potentiometer or 4...20 mA analogue signal
- Slowly rotating variant
- 3-position actuator (90° or 180°)
- Emergency reset
- 3/2-way variant

Port connection
3-piece ball valves also available in variants with NPT thread or welded connection

RIEGLER & Co. KG
Schützenstraße 27
72574 Bad Urach
Tel. +49 7125 9497-642
technik@riegler.de

Subject to technical changes and errors reserved.
The proficiency testing is the responsibility of the user.
07.10.2026 The specified data do not represent legally guaranteed properties.

DTS 1000082140 EN Version: AB Status: RL (released | freigegeben | validé) printed: 18.12.2024

7.4. Ordering chart accessories

Reducing sleeves

Description	Article no.
Reducing sleeve double square/square14/9 mm	665288
Reducing sleeve double square/square 14/11 mm	665289
Reducing sleeve square/square 17/14 mm	665290
Reducing sleeve double square/square 17/14 mm	773348
Reducing sleeve double square/square 17/11 mm	773343
Reducing sleeve square/square 22/19 mm	773836
Reducing sleeve double square/square 22/17 mm	684858
Reducing sleeve double square/double suqare 22/14 mm	666684
Reducing sleeve double square/square 22/11 mm	773344
Reducing sleeve double square/square 27/22 mm	774594
Reducing sleeve square/square 27/19 mm	774279
Reducing sleeve square/square 27/17 mm	774193

Replacement battery for actuators with electronic emergency reset function

Note:

- The battery has to be replaced every 2 years at the latest or after 500 charging cycles.
- Additional information for Type 3004: the person who changes the battery must be trained and qualified to do modifications on ATEX products.
- Actuators without electronic emergency reset when delivered cannot be retrofitted.

Description	Article no.
Replacement battery for actuators of Type 3003 with electronic emergency reset function	770051
Replacement battery for actuators of Type 3005 and 3004 (25 Nm...300 Nm) with electronic emergency reset function	772991

DTS 1000082140 EN Version: AB Status: RL (released | freigegeben | validé) printed: 18.12.2024

RIEGLER & Co. KG
Schützenstraße 27
72574 Bad Urach
Tel. +49 7125 9497-642
technik@riegler.de

Subject to technical changes and errors reserved.
The proficiency testing is the responsibility of the user.
07.10.2026 The specified data do not represent legally guaranteed properties.