Operating pressure: max. 12 bar
Operating temperature: -20 °C to +70 °C

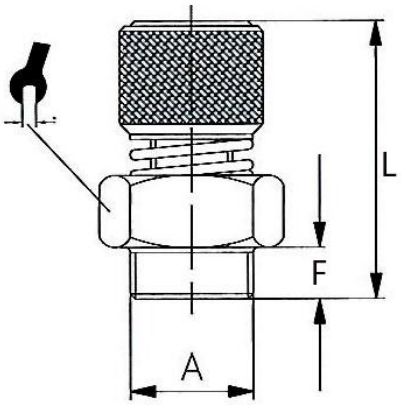



561.1

Adjustable spring silencer						
Art. No.	Type No.	Thread	a/f mm	F mm	L min. mm	L max. mm
113370	561.1	G 1/8	13	12.0	26.0	28.0
113371	561.2	G 1/4	15	14.0	30.0	32.0
113372	561.3	G 3/8	22	17.0	36.0	38.0
113373	561.4	G 1/2	22	17.0	37.0	39.0
113374	561.5	G 3/4	30	32.0	46.0	50.0
113375	561.6	G 1	36	32.0	47.0	50.0

Flow and Noise level						
Art. No.	Type No.	Thread	Flow 6 bar l/min.	Flow 4 bar l/min.	Noise level 6 bar dB(A)	Noise level 4 bar dB(A)
113370	561.1	G 1/8	107	87	85	79
113371	561.2	G 1/4	145	122	84	78
113372	561.3	G 3/8	242	198	83	78
113373	561.4	G 1/2	242	198	83	78
113374	561.5	G 3/4	950	783	95	92
113375	561.6	G 1	950	783	95	92

RIEGLER & Co. KG, Sales Engineering
Schützenstraße 27 | 72574 Bad Urach
Tel. +49 7125 9497-642
technik@riegler.de

Subject to technical changes an errors reserved. The proficiency testing is the responsibility of the user. The specified data do not represent legally guaranteed properties