Throttle plate

Art. No. 103664

Type No. 551.42

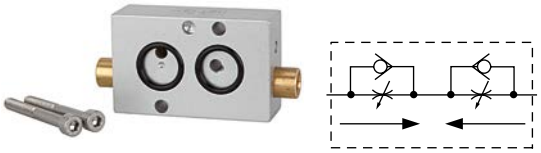

Exemplary illustration

Block-form flow regulator as an intermediate plate between the control valve and actuator acc. to the G 1/4 NAMUR standard.

3/2-way flow regulators:
Independent regulation of the forward and return strokes of a single-acting pneumatic actuator.

5/2-way flow regulators:
Regulation of the forward and return strokes of a double-acting pneumatic actuator.

Technical data

Version	3-way, actuated by screwdriver
Scope of delivery	2 O-rings, 2 fixing screws
DN	5 mm
Flow rate	650 l/min
Medium	filtered compressed air with or without lubrication. If lubricated, then continuous.
Required purity class in accordance w. ISO 8573-1	7.4.4
Working pressure	0.5 - 10 bar
Operating temperature	-20 to 70 °C
Housing	anodised aluminium
Sealant	NBR

RIEGLER & Co. KG
Schützenstraße 27
72574 Bad Urach
Tel. +49 7125 9497-642
technik@riegler.de

Subject to technical changes and errors reserved.
The proficiency testing is the responsibility of the user.
09.11.2026 The specified data do not represent legally guaranteed properties.

Commercial data

Customs tariff number	84812090
Country of origin	HU
eCl@ss 5.1.4	27299290
eCl@ss 9.0	27299290
UNSPSC_Code_v190501	40141616
UNSPSC_CodeDesc_v190501	Valve parts or accessories

Material informations

REACH SVHC1 substance name	lead
CAS no. SVHC 1	7439-92-1
RoHS materials notice	RoHS compliant
REACH Info	contains SVHC substance

Dimensions [mm]

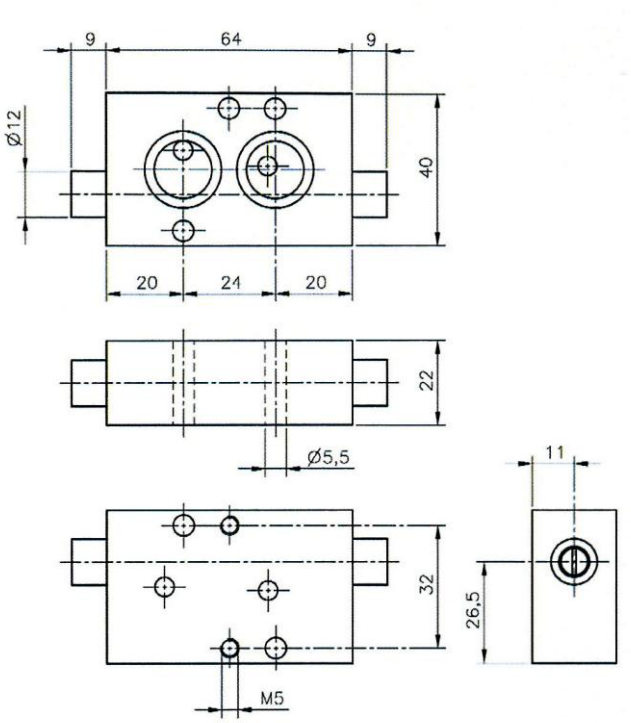

RIEGLER & Co. KG
Schützenstraße 27
72574 Bad Urach
Tel. +49 7125 9497-642
technik@riegler.de

Subject to technical changes and errors reserved.
The proficiency testing is the responsibility of the user.
09.11.2026 The specified data do not represent legally guaranteed properties.