5/2-way valve

with NAMUR style interface

PLUS

Art. No. **103662**

Type No. **551.32**

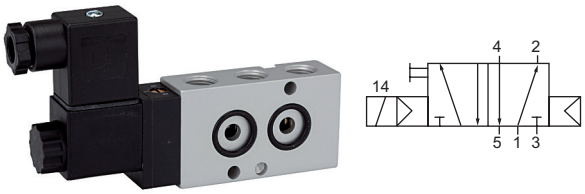

Exemplary illustration

3/2 and 5/2-way spool valves, monostable, with air purging function and pneumatic spring return.
With latching manual operator and optional outgoing air restriction.

The following finishes are available on request:
- stainless steel, alternatively Ematal surfaces
- ATEX
- suitable for low temperatures
- suitable for high temperatures

Technical data

Operation	electropneumatic
Function	5/2 monostable
Version	standard pin assignment
Connection	G 1/4 IT
Voltage	24 V DC
Electrical connection	connector socket PG 9
Scope of delivery	plug connector PG 9, 1 coding pin, 2 Orings, 2 fixing screws
DN	7 mm
Flow rate	1250 l/min
Medium	filtered compressed air with or without lubrication. If lubricated, then continuous.
Required purity class in accordance w. ISO 8573-1	7.4.4
Working pressure	1.5 - 10 bar
Power input	3 W=/ 5 VA~
Protection IP	IP 65
Switching time at 6 bar ON / OFF	13/16 ms
Operating temperature	-20 to 70 °C
Housing	anodised aluminium
Sealant	NBR

RIEGLER & Co. KG
Schützenstraße 27
72574 Bad Urach
Tel. +49 7125 9497-642
technik@riegler.de

Subject to technical changes and errors reserved.
The proficiency testing is the responsibility of the user.
09.11.2026 The specified data do not represent legally guaranteed properties.

Technical data

Spool	Stainless steel
Manual override	latching

Commercial data

Customs tariff number	84812090
Country of origin	HU
eCl@ss 5.1.4	27291501
eCl@ss 9.0	27291390
UNSPSC_Code_v190501	40141603
UNSPSC_CodeDesc_v190501	Pneumatic valves

Material informations

REACH SVHC1 substance name	lead
CAS no. SVHC 1	7439-92-1
RoHS materials notice	RoHS compliant
REACH Info	contains SVHC substance

Dimensions [mm]

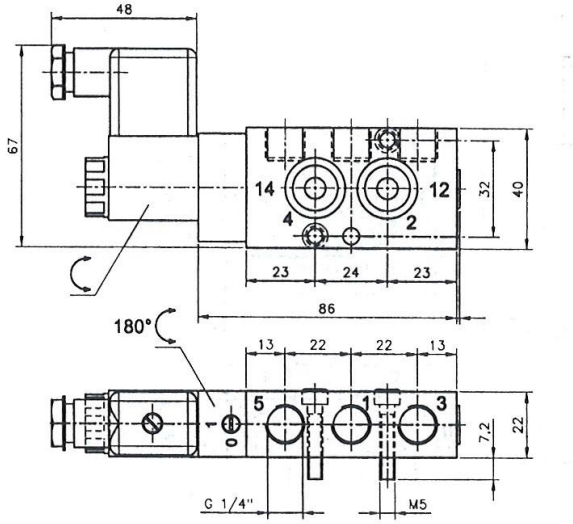

RIEGLER & Co. KG
Schützenstraße 27
72574 Bad Urach
Tel. +49 7125 9497-642
technik@riegler.de

Subject to technical changes and errors reserved.
The proficiency testing is the responsibility of the user.
09.11.2026 The specified data do not represent legally guaranteed properties.

Accessories

	Art. No.	Type No.
Throttle plate for NAMUR valves, Anodised aluminium, Temp. -20 °C to 70 °C, Working pressure 0.5 - 10 bar, 5-way, Knurled screw	103665	551.51
Throttle plate for NAMUR valves, Anodised aluminium, Temp. -20 °C to 70 °C, Working pressure 0.5 - 10 bar, 5-way, Screwdriver	103666	551.52

RIEGLER & Co. KG
Schützenstraße 27
72574 Bad Urach
Tel. +49 7125 9497-642
technik@riegler.de

Subject to technical changes and errors reserved.
The proficiency testing is the responsibility of the user.
09.11.2026 The specified data do not represent legally guaranteed properties.