



ISO 21287

symbol

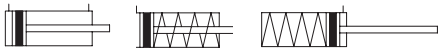

Art. No. 155320 - 155999
Type No. 15.DMI.12005 - 15.AMA.100025

Product features

Series acc. to ISO 21287 characterised by a very short and compact design. The standard type features a magnetic piston. Piston rod optionally with male or female thread. Suitable for filtered, unlubricated or lubricated compressed air. If lubrication is used, it must be continuous.

Technical data

Piston-Ø [mm]	12	16	20	25	32	40	50	63	80	100	125
Acting type	double acting										
	single acting										-
Fluid	filtered, unlubricated or lubricated compressed air (to be filtered by 40 µm filter element). If lubrication is used, it must be continuous.										
Working pressure	1–10 bar (0.1 to 1.0 MPa; 14 to 145 psi)										
Proof pressure	15 bar (1.5 MPa; 215 psi)										
Temperature range	-20 to 70 °C										
Speed range	30–500 mm/s										
Cushion type	damping ring										
Port size	M5x0,8				1/8"						1/4“

Stroke, double acting

Piston-Ø [mm]	Standard stroke
12	5 / 10 / 15 / 20 / 25 / 30 / 35 / 40 / 45 / 50
16	5 / 10 / 15 / 20 / 25 / 30 / 35 / 40 / 45 / 50 / 55 / 60 / 65 / 70 / 75
20	5 / 10 / 15 / 20 / 25 / 30 / 35 / 40 / 45 / 50 / 55 / 60 / 65 / 70 / 75 / 80 / 90 / 100
25	5 / 10 / 15 / 20 / 25 / 30 / 35 / 40 / 45 / 50 / 55 / 60 / 65 / 70 / 75 / 80 / 90 / 100 / 110 / 120 / 125 / 150
32	5 / 10 / 15 / 20 / 25 / 30 / 35 / 40 / 45 / 50 / 55 / 60 / 65 / 70 / 75 / 80 / 90 / 100 / 110 / 120 / 125 / 150 / 160 / 175 / 200
40	5 / 10 / 15 / 20 / 25 / 30 / 35 / 40 / 45 / 50 / 55 / 60 / 65 / 70 / 75 / 80 / 90 / 100 / 110 / 120 / 125 / 150 / 160 / 175 / 200
50	5 / 10 / 15 / 20 / 25 / 30 / 35 / 40 / 45 / 50 / 55 / 60 / 65 / 70 / 75 / 80 / 90 / 100 / 110 / 120 / 125 / 150 / 160 / 175 / 200 / 225 / 250
63	5 / 10 / 15 / 20 / 25 / 30 / 35 / 40 / 45 / 50 / 55 / 60 / 65 / 70 / 75 / 80 / 90 / 100 / 110 / 120 / 125 / 150 / 160 / 175 / 200 / 225 / 250
80	5 / 10 / 15 / 20 / 25 / 30 / 35 / 40 / 45 / 50 / 55 / 60 / 65 / 70 / 75 / 80 / 90 / 100 / 110 / 120 / 125 / 150 / 160 / 175 / 200 / 225 / 250 / 275 / 300
100	5 / 10 / 15 / 20 / 25 / 30 / 35 / 40 / 45 / 50 / 55 / 60 / 65 / 70 / 75 / 80 / 90 / 100 / 110 / 120 / 125 / 150 / 160 / 175 / 200 / 225 / 250 / 275 / 300
125	5 / 10 / 15 / 20 / 25 / 30 / 35 / 40 / 45 / 50 / 55 / 60 / 65 / 70 / 75 / 80 / 90 / 100 / 110 / 120 / 125 / 150 / 160 / 175 / 200 / 225 / 250 / 275 / 300

(Dimensions in mm)

Order information
double acting, with magnet, female thread on the piston rod

Type No.	Piston-Ø	Stroke	Connection	Piston rod female thread
15.DMI.12005–12050	12	5–50	M5	M3x0.5
15.DMI.16005–16075	16	5–75	M5	M4x0.7
15.DMI.20005–20100	20	5–100	M5	M6x1.0
15.DMI.25005–25150	25	5–150	M5	M6x1.0
15.DMI.32005–32200	32	5–200	G 1/8	M8x1.25
15.DMI.40005–40200	40	5–200	G 1/8	M8x1.25
15.DMI.50005–50250	50	5–250	G 1/8	M10x1.5
15.DMI.63005–63250	63	5–250	G 1/8	M10x1.5
15.DMI.80005–80300	80	5–300	G 1/8	M12x1.75
15.DMI.100005–100300	100	5-300	G 1/8	M12x1.75
15.DMI.125005–125300	125	5-300	G 1/4	M16x2.0

(Dimensions in mm)

Order information
double acting, with magnet, male thread on the piston rod

Type No.	Piston-Ø	Stroke	Connection	Piston rod male thread
15.DMA.12005–12050	12	5–50	M5	M5x0.8
15.DMA.16005–16075	16	5–75	M5	M6x1.0
15.DMA.20005–20100	20	5–100	M5	M8x1.25
15.DMA.25005–25150	25	5–150	M5	M8x1.25
15.DMA.32005–32200	32	5–200	G 1/8	M10x1.25
15.DMA.40005–40200	40	5–200	G 1/8	M10x1.25
15.DMA.50005–50250	50	5–250	G 1/8	M12x1.25
15.DMA.63005–63250	63	5–250	G 1/8	M12x1.25
15.DMA.80005–80300	80	5–300	G 1/8	M16x1.5
15.DMA.100005–100300	100	5-300	G 1/8	M16x1.5
15.DMA.125005–125300	125	5-300	G 1/4	M20x1.5

(Dimensions in mm)

Piston stroke, single acting

Piston-Ø	Standard stroke	Max. stroke
12	5 / 10	10
16	5 / 10 / 15 / 20 / 25	25
20	5 / 10 / 15 / 20 / 25	25
25	5 / 10 / 15 / 20 / 25	25
32	5 / 10 / 15 / 20 / 25	25
40	5 / 10 / 15 / 20 / 25	25
50	5 / 10 / 15 / 20 / 25	25
63	5 / 10 / 15 / 20 / 25	25
80	5 / 10 / 15 / 20 / 25	25
100	5 / 10 / 15 / 20 / 25	25
125	5 / 10 / 15 / 20 / 25	25

(Dimensions in mm)

Order information
single acting, retracted without pressure, with magnet, female thread on the piston rod

Type No.	Piston-Ø	Stroke	Connection	Piston rod female thread
15.EMI.12005–12010	12	5–10	M5	M3x0.5
15.EMI.16005–16025	16	5–25	M5	M4x0.7
15.EMI.20005–20025	20	5–25	M5	M6x1.0
15.EMI.25005–25025	25	5–25	M5	M6x1.0
15.EMI.32005–32025	32	5–25	G 1/8	M8x1.25
15.EMI.40005–40025	40	5–25	G 1/8	M8x1.25
15.EMI.50005–50025	50	5–25	G 1/8	M10x1.5
15.EMI.63005–63025	63	5–25	G 1/8	M10x1.5
15.EMI.80005–80025	80	5–25	G 1/8	M12x1.75
15.EMI.100005–100025	100	5-25	G 1/8	M12x1.75

(Dimensions in mm)

Order information
single acting, retracted without pressure, with magnet, male thread on the piston rod

Type No.	Piston-Ø	Stroke	Connection	Piston rod mal thread
15.EMA.12005–12010	12	5–10	M5	M5x0.8
15.EMA.16005–16025	16	5–25	M5	M6x1.0
15.EMA.20005–20025	20	5–25	M5	M8x1.25
15.EMA.25005–25025	25	5–25	M5	M8x1.25
15.EMA.32005–32025	32	5–25	G 1/8	M10x1.25
15.EMA.40005–40025	40	5–25	G 1/8	M10x1.25
15.EMA.50005–50025	50	5–25	G 1/8	M12x1.25
15.EMA.63005–63025	63	5–25	G 1/8	M12x1.25
15.EMA.80005–80025	80	5–25	G 1/8	M16x1.5
15.EMA.100005–100025	100	5-25	G 1/8	M16x1.5

(Dimensions in mm)

Order information
single acting, normally extended, with magnet, female thread on the piston rod

Type No.	Piston-Ø	Stroke	Connection	Piston rod female thread
15.AMI.12005–12010	12	5–10	M5	M3x0.5
15.AMI.16005–16025	16	5–25	M5	M4x0.7
15.AMI.20005–20025	20	5–25	M5	M6x1.0
15.AMI.25005–25025	25	5–25	M5	M6x1.0
15.AMI.32005–32025	32	5–25	G 1/8	M8x1.25
15.AMI.40005–40025	40	5–25	G 1/8	M8x1.25
15.AMI.50005–50025	50	5–25	G 1/8	M10x1.5
15.AMI.63005–63025	63	5–25	G 1/8	M10x1.5
15.AMI.80005–80025	80	5–25	G 1/8	M12x1.75
15.AMI.100005–100025	100	5-25	G 1/8	M12x1.75

(Dimensions in mm)

Order information
single acting, normally extended, with magnet, male thread on the piston rod

Type No.	Piston-Ø	Stroke	Connection	Piston rod female thread
15.AMA.12005–12010	12	5–10	M5	M5x0.8
15.AMA.16005–16025	16	5–25	M5	M6x1.0
15.AMA.20005–20025	20	5–25	M5	M8x1.25
15.AMA.25005–25025	25	5–25	M5	M8x1.25
15.AMA.32005–32025	32	5–25	G 1/8	M10x1.25
15.AMA.40005–40025	40	5–25	G 1/8	M10x1.25
15.AMA.50005–50025	50	5–25	G 1/8	M12x1.25
15.AMA.63005–63025	63	5–25	G 1/8	M12x1.25
15.AMA.80005–80025	80	5–25	G 1/8	M16x1.5
15.AMA.100005–100025	100	5-25	G 1/8	M16x1.5

(Dimensions in mm)

»ACE« type

15.DMI.12005 to 15.DMI.125300 and 15.DMA.12005 to 15.DMA.125300

Dimensions

Φ12

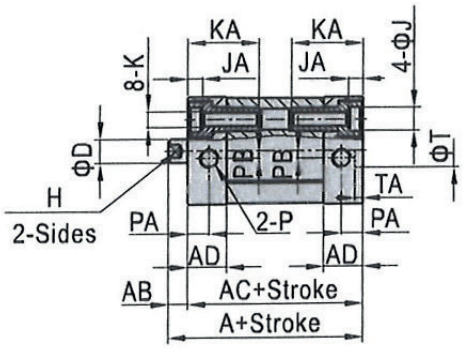

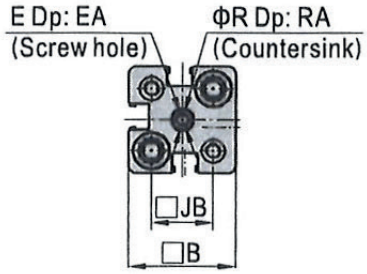

Φ16~Φ25

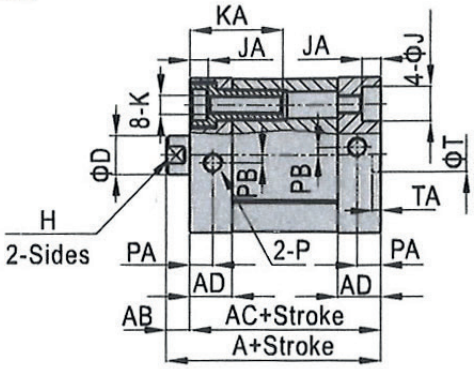

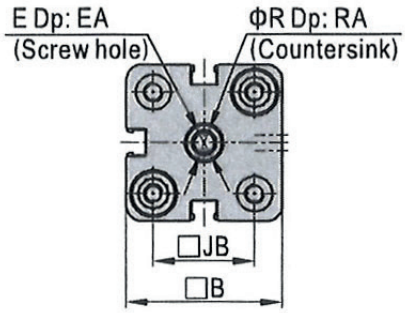

Φ32~Φ63

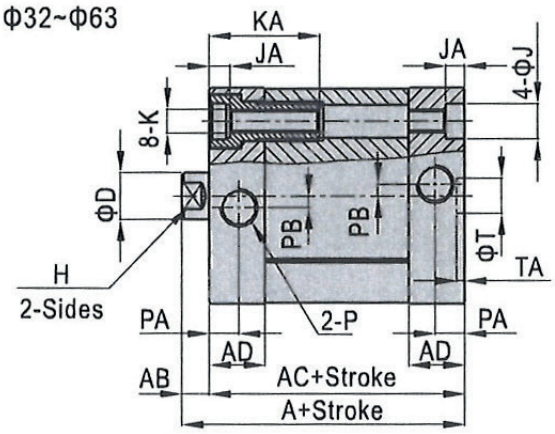

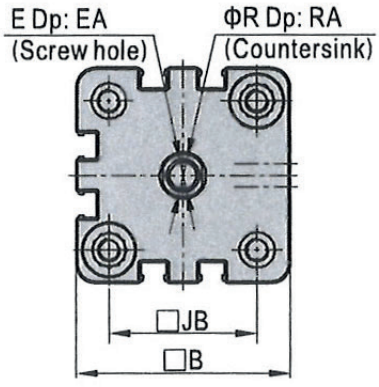

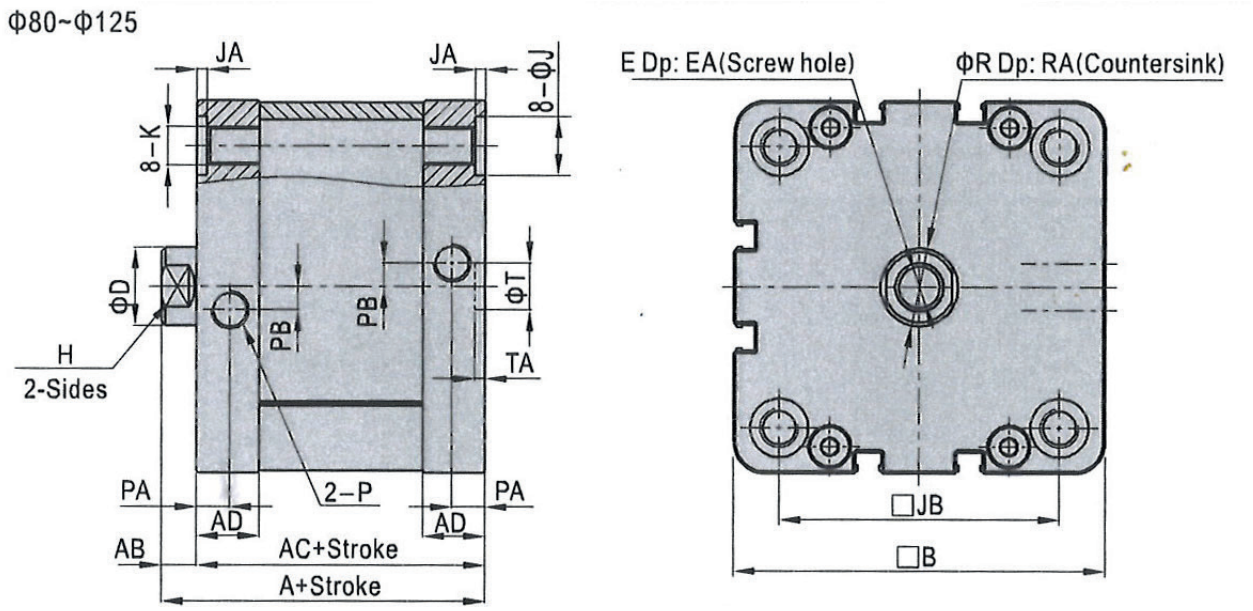

Piston-Ø	A	AB	AC	AD	B	D	E	EA	H	J	JA	JB	K	KA
12	40	5	35	10	27.5	6	M3x0.5	8	5	6	3.5	16	M4x0.7	18.5
16	40	5	35	10	30	8	M4x0.7	10	7	6	3.5	18	M4x0.7	18.5
20	43	6	37	10.5	35.5	10	M6x1.0	14	9	9	4.5	22	M5x0.8	23.5
25	45	6	39	11	40	10	M6x1.0	14	9	9	4.5	26	M5x0.8	23.5
32	51	7	44	14	49.5	12	M8x1.25	16	10	9	4.5	32.5	M6x1.0	28.5
40	52.5	7	45.5	14.5	55	12	M8x1.25	16	10	9	4.5	38	M6x1.0	28.5
50	53.5	8	45.5	14.5	65.5	16	M10x1.5	20	13	11	4.5	46.5	M8x1.25	30.5
63	57	8	49	15	75.5	16	M10x1.5	20	13	11	4.5	56.5	M8x1.25	30.5
80	63	9	54	16	95.5	20	M12x1.75	20	17	15	2.5	72	M10x1.5	-
100	76	9	67	19	113.5	20	M12x1.75	20	17	15	2.5	89	M10x1.5	-
125	92	11	81	20	134.5	25	M16x2.0	25	21	-	-	110	M12x1.75	-

Piston-Ø	P	PA	PB	R	RA	T	TA
12	M5x0.8	5.5	2	3.5	1.5	9	2.1
16	M5x0.8	5.5	2	4.5	1.5	9	2.1
20	M5x0.8	6	2	6.5	2.5	9	2.1
25	M5x0.8	6	2	6.5	2.5	9	2.1
32	G1/8	7.5	3	8.5	3.5	9	2.1
40	G1/8	7.5	3	8.5	3.5	9	2.1
50	G1/8	7.5	3	10.5	4.5	12	2.6
63	G1/8	7.5	4	10.5	4.5	12	2.6
80	G1/8	8.5	6	12.5	6	12	2.6
100	G1/8	10.5	7	12.5	6	12	2.6
125	G1/4	10.5	8	16.5	7	12	2.6

(Dimensions in mm)

»ASE« type

15.EMI.12005 to 15.EMI.100025 and 15.EMA.12005 to 15.EMA.100025

Dimensions

Φ12

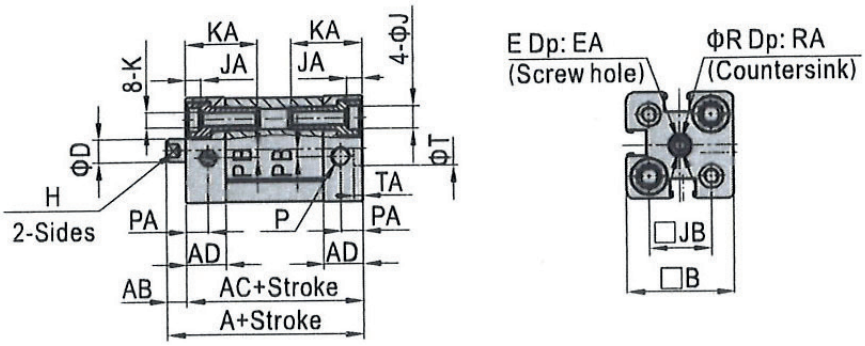

Φ16~Φ25

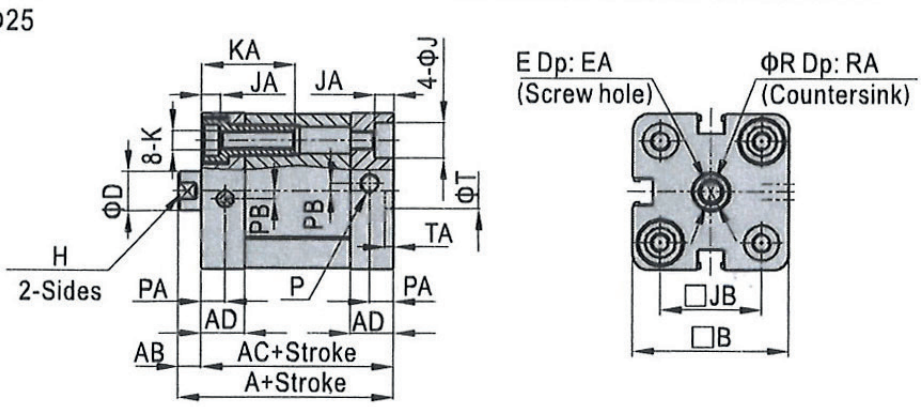

Φ32~Φ63

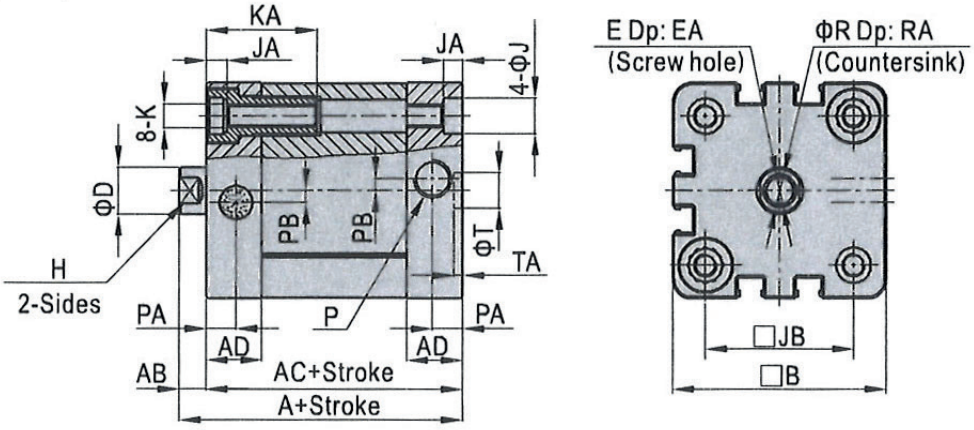

Φ80/Φ100

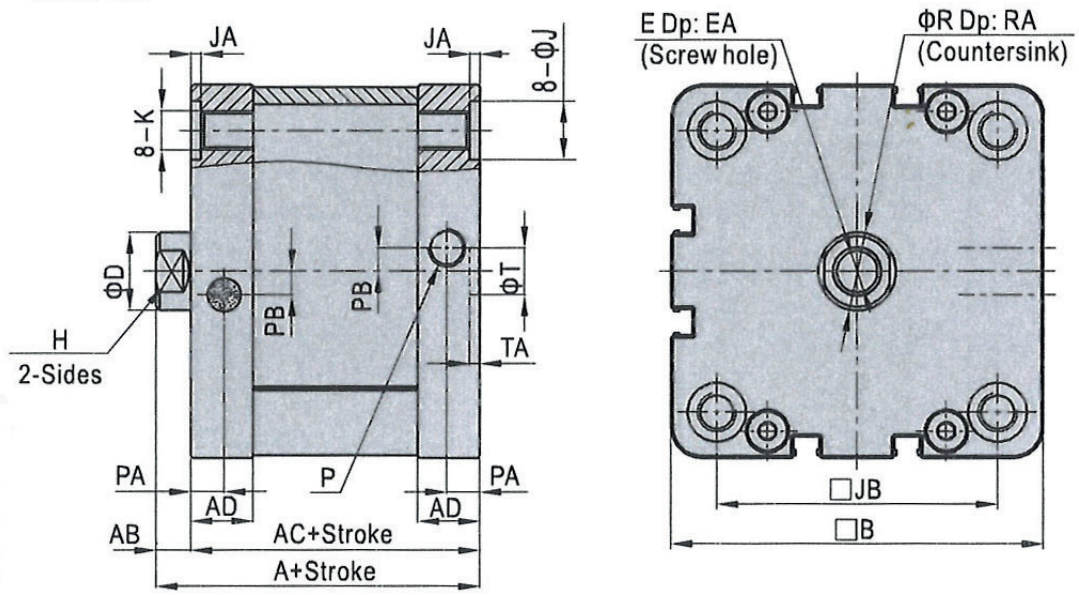

Piston-Ø	A	AB	AC	AD	B	D	E	EA	H	J	JA	JB	K	KA
12	40	5	35	10	27.5	6	M3x0.5	8	5	6	3.5	16	M4x0.7	18.5
16	40	5	35	10	30	8	M4x0.7	10	7	6	3.5	18	M4x0.7	18.5
20	43	6	37	10.5	35.5	10	M6x1.0	14	9	9	4.5	22	M5x0.8	23.5
25	45	6	39	11	40	10	M6x1.0	14	9	9	4.5	26	M5x0.8	23.5
32	51	7	44	14	49.5	12	M8x1.25	16	10	9	4.5	32.5	M6x1.0	28.5
40	52.5	7	45.5	14.5	55	12	M8x1.25	16	10	9	4.5	38	M6x1.0	28.5
50	53.5	8	45.5	14.5	65.5	16	M10x1.5	20	13	11	4.5	46.5	M8x1.25	30.5
63	57	8	49	15	75.5	16	M10x1.5	20	13	11	4.5	56.5	M8x1.25	30.5
80	63	9	54	16	95.5	20	M12x1.75	20	17	15	2.5	72	M10x1.5	-
100	76	9	67	19	113.5	20	M12x1.75	20	17	15	2.5	89	M10x1.5	-

Piston-Ø	P	PA	PB	R	RA	T	TA
12	M5x0.8	5.5	2	3.5	1.5	9	2.1
16	M5x0.8	5.5	2	4.5	1.5	9	2.1
20	M5x0.8	6	2	6.5	2.5	9	2.1
25	M5x0.8	6	2	6.5	2.5	9	2.1
32	G1/8	7.5	3	8.5	3.5	9	2.1
40	G1/8	7.5	3	8.5	3.5	9	2.1
50	G1/8	7.5	3	10.5	4.5	12	2.6
63	G1/8	7.5	4	10.5	4.5	12	2.6
80	G1/8	8.5	6	12.5	6	12	2.6
100	G1/8	10.5	7	12.5	6	12	2.6

(Dimensions in mm)

»ATE« type

15.AMI.12005 to 15.AMI.100025 and 15.AMA.12005 to 15.AMA.100025

Dimensions

Φ12

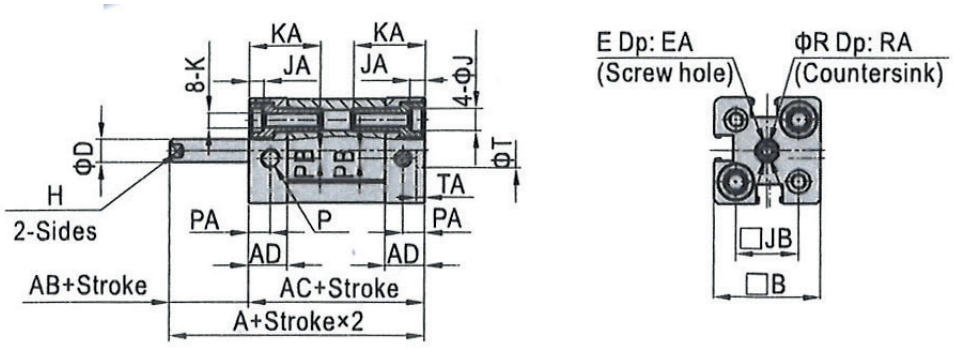

Φ16~Φ25

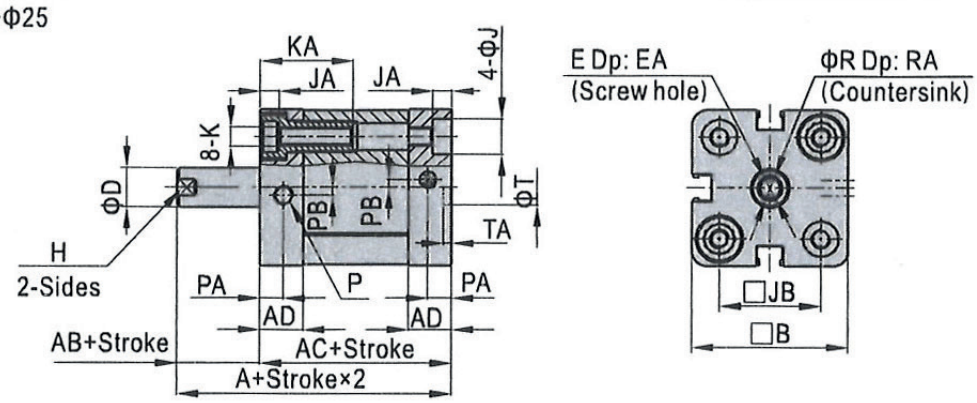

Φ32~Φ63

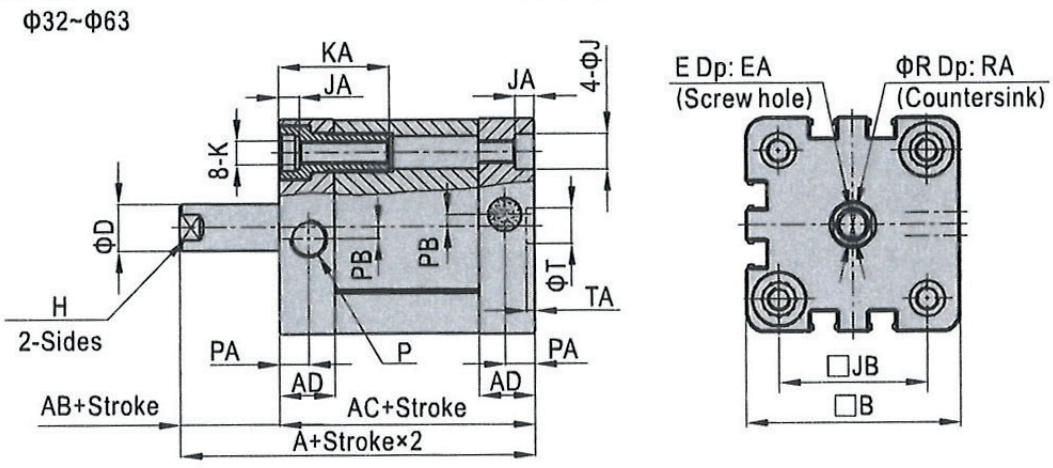

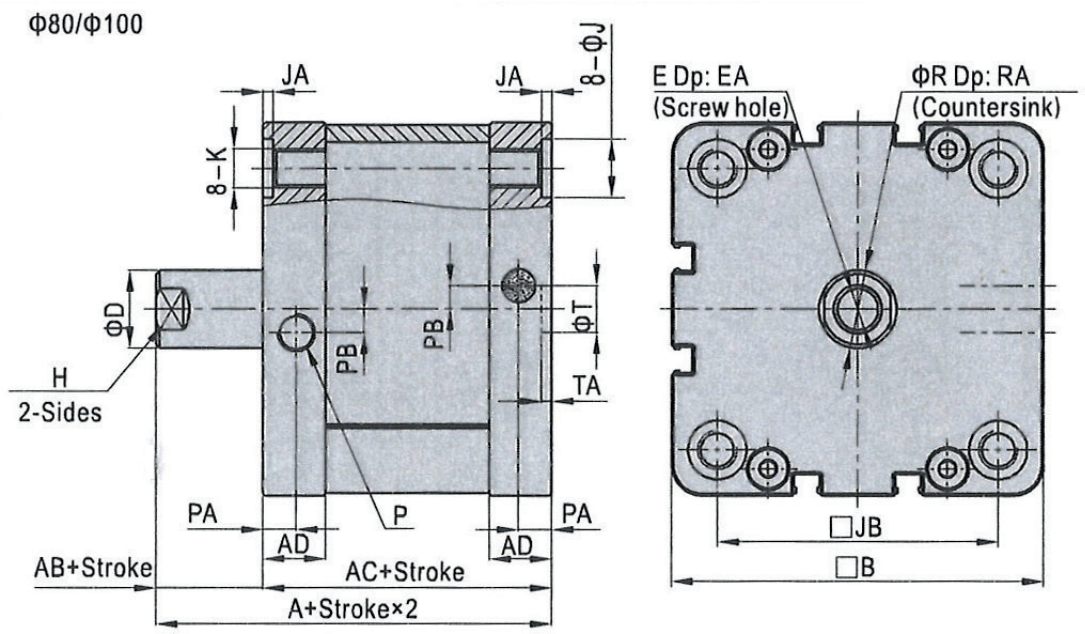

Piston-Ø	A	AB	AC	AD	B	D	E	EA	H	J	JA	JB	K	KA
12	40	5	35	10	27.5	6	M3x0.5	8	5	6	3.5	16	M4x0.7	18.5
16	40	5	35	10	30	8	M4x0.7	10	7	6	3.5	18	M4x0.7	18.5
20	43	6	37	10.5	35.5	10	M6x1.0	14	9	9	4.5	22	M5x0.8	23.5
25	45	6	39	11	40	10	M6x1.0	14	9	9	4.5	26	M5x0.8	23.5
32	51	7	44	14	49.5	12	M8x1.25	16	10	9	4.5	32.5	M6x1.0	28.5
40	52.5	7	45.5	14.5	55	12	M8x1.25	16	10	9	4.5	38	M6x1.0	28.5
50	53.5	8	45.5	14.5	65.5	16	M10x1.5	20	13	11	4.5	46.5	M8x1.25	30.5
63	57	8	49	15	75.5	16	M10x1.5	20	13	11	4.5	56.5	M8x1.25	30.5
80	63	9	54	16	95.5	20	M12x1.75	20	17	15	2.5	72	M10x1.5	-
100	76	9	67	19	113.5	20	M12x1.75	20	17	15	2.5	89	M10x1.5	-

Piston-Ø	P	PA	PB	R	RA	T	TA
12	M5x0.8	5.5	2	3.5	1.5	9	2.1
16	M5x0.8	5.5	2	4.5	1.5	9	2.1
20	M5x0.8	6	2	6.5	2.5	9	2.1
25	M5x0.8	6	2	6.5	2.5	9	2.1
32	G1/8	7.5	3	8.5	3.5	9	2.1
40	G1/8	7.5	3	8.5	3.5	9	2.1
50	G1/8	7.5	3	10.5	4.5	12	2.6
63	G1/8	7.5	4	10.5	4.5	12	2.6
80	G1/8	8.5	6	12.5	6	12	2.6
100	G1/8	10.5	7	12.5	6	12	2.6

(Dimensions in mm)

Components and materials

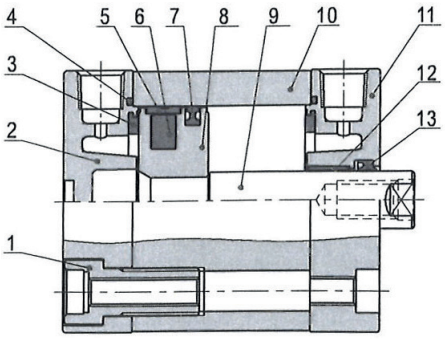

No.	Item	Material
1	Screw	Carbon steel
2	Back cover	Aluminium alloy
3	Bumper	TPU
4	O-ring	NBR
5	Wear ring	No (Ø12~20)/Wear resistant material (Others)
6	Magnet	Sintered metal (Neodymium-iron-boron) (Ø12~20) Plastic (Others)
7	Piston seal	NBR
8	Piston	Aluminium alloy
9	Piston rod	S45C
10	Body	Aluminium alloy
11	Front cover	Aluminium alloy
12	Bushing	No (Ø12~25)/Wear resistant material (Others)
13	Front cover packing	NBR

Dimensions

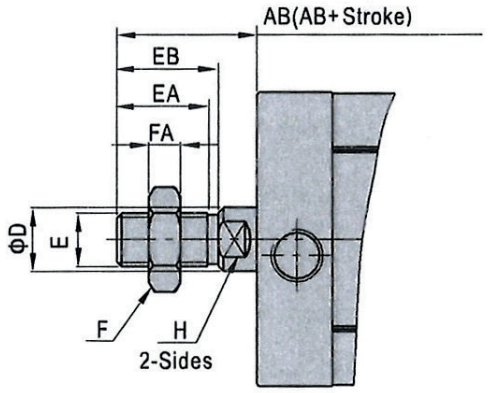

Piston-Ø	AB	D	E	EA	EB	F	FA	H
12	15	6	M5x0.8	9	10	8	4	5
16	17	8	M6x1.0	11	12	10	5	7
20	22	10	M8x1.25	15	16	12	6	9
25	22	10	M8x1.25	15	16	12	6	9
32	26	12	M10x1.25	17	19	17	6	10
40	26	12	M10x1.25	17	19	17	6	10
50	30	16	M12x1.25	20	22	17	7	13
63	30	16	M12x1.25	20	22	17	7	13
80	37	20	M16x1.5	26	28	23	8	17
100	37	20	M16x1.5	26	28	23	8	17
125	51	25	M20x1.5	38	40	26	10	21

(Dimensions in mm)

Accessories

Sensor switch for compact cylinder 235.200–235.205

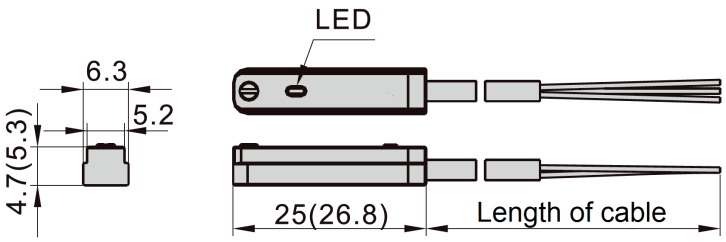

Dimensions in brackets apply to REED.

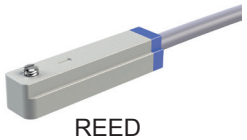
REED

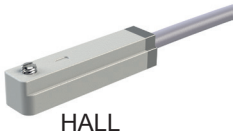
HALL

Technical data

	REED, NO	HALL, NO, NPN	HALL, NO, PNP
Operating voltage	5...240 V AC/DC	5...30 V DC	
Max. switching current	100 mA	30 V / 200 mA	
Max. switching rating	10 W	6 W	
Max. current consumption	-	5 mA	
Max. voltage drop	2.5 V at 100 mA DC	0.7 V	
Max. leakage current	-	0.01 mA	
Max. frequency	200 Hz	1000 Hz	
Shock resistance	50 g		
Protection circuit	-	reverse polarity protected, overvoltage protection	
Temperature range	-10 °C to 70 °C*	-10 °C to 70 °C	
Enclosure classification	IP 64	IP 64**	

* High temperature version (max. 125 °C) available on request.
** IP 68 available on request; only for versions with open cable.

Order information

Type No.	Type
235.200	Reed sensor, 2-wire, M8-plug, 150 mm cable, NO
235.201	Reed sensor, 2-wire, 3 m cable, NO
235.202	Hall sensor, 3-wire, M8-plug 150 mm cable, NO, NPN
235.203	Hall sensor, 3-wire, 3 m cable, NO, NPN
235.204	Hall sensor, 3-wire, M8-plug, 150 mm cable, NO, PNP
235.205	Hall sensor, 3-wire, 3 m cable, NO, PNP

Installation

Installation accessories for sensors (235.200–235.205) are not required. They can be slid in the groove of the cylinder body and screwed down.

1. Unscrew the clamping screw at the sensor.
2. Insert sensor into the groove and push it in the desired position.
3. Tighten fixing screw.

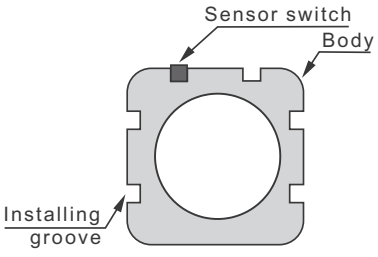

»ACE« type

15.DMI.12005 to 15.DMI.125300 and 15.DMA.12005 to 15.DMA.125300

Order information

Type No.	Art. No.
15.DMI.12005	155320
15.DMI.12010	155321
15.DMI.12015	155322
15.DMI.12020	155323
15.DMI.12025	155324
15.DMI.12030	155325
15.DMI.12035	155326
15.DMI.12040	155327
15.DMI.12045	155328
15.DMI.12050	155329
15.DMI.16005	155330
15.DMI.16010	155331
15.DMI.16015	155332
15.DMI.16020	155333
15.DMI.16025	155334
15.DMI.16030	155335
15.DMI.16035	155336
15.DMI.16040	155337
15.DMI.16045	155338
15.DMI.16050	155339
15.DMI.16055	155340
15.DMI.16060	155341
15.DMI.16070	155342
15.DMI.16075	155343
15.DMI.20005	155344
15.DMI.20010	155345
15.DMI.20015	155346
15.DMI.20020	155347
15.DMI.20025	155348
15.DMI.20030	155349
15.DMI.20035	155350
15.DMI.20040	155351
15.DMI.20045	155352
15.DMI.20050	155353
15.DMI.20055	155354
15.DMI.20060	155355
15.DMI.20070	155356
15.DMI.20075	155357
15.DMI.20080	155358
15.DMI.20090	155359
15.DMI.20100	155360
15.DMI.25005	155361
15.DMI.25010	155362
15.DMI.25015	155363
15.DMI.25020	155364
15.DMI.25025	155365
15.DMI.25030	155366

Order information

Type No.	Art. No.
15.DMI.25035	155367
15.DMI.25040	155368
15.DMI.25045	155369
15.DMI.25050	155370
15.DMI.25055	155371
15.DMI.25060	155372
15.DMI.25070	155373
15.DMI.25075	155374
15.DMI.25080	155375
15.DMI.25090	155376
15.DMI.25100	155377
15.DMI.25110	155378
15.DMI.25120	155379
15.DMI.25125	155380
15.DMI.25150	155381
15.DMI.32005	155382
15.DMI.32010	155383
15.DMI.32015	155384
15.DMI.32020	155385
15.DMI.32025	155386
15.DMI.32030	155387
15.DMI.32035	155388
15.DMI.32040	155389
15.DMI.32045	155390
15.DMI.32050	155391
15.DMI.32055	155392
15.DMI.32060	155393
15.DMI.32070	155394
15.DMI.32075	155395
15.DMI.32080	155396
15.DMI.32090	155397
15.DMI.32100	155398
15.DMI.32110	155399
15.DMI.32120	155400
15.DMI.32125	155401
15.DMI.32150	155402
15.DMI.32160	155403
15.DMI.32175	155404
15.DMI.32200	155405
15.DMI.40005	155406
15.DMI.40010	155407
15.DMI.40015	155408
15.DMI.40020	155409
15.DMI.40025	155410
15.DMI.40030	155411
15.DMI.40035	155412
15.DMI.40040	155413

Order information

Type No.	Art. No.
15.DMI.40045	155414
15.DMI.40050	155415
15.DMI.40055	155416
15.DMI.40060	155417
15.DMI.40070	155418
15.DMI.40075	155419
15.DMI.40080	155420
15.DMI.40090	155421
15.DMI.40100	155422
15.DMI.40110	155423
15.DMI.40120	155424
15.DMI.40125	155425
15.DMI.40150	155426
15.DMI.40160	155427
15.DMI.40175	155428
15.DMI.40200	155429
15.DMI.50005	155430
15.DMI.50010	155431
15.DMI.50015	155432
15.DMI.50020	155433
15.DMI.50025	155434
15.DMI.50030	155435
15.DMI.50035	155436
15.DMI.50040	155437
15.DMI.50045	155438
15.DMI.50050	155439
15.DMI.50055	155440
15.DMI.50060	155441
15.DMI.50070	155442
15.DMI.50075	155443
15.DMI.50080	155444
15.DMI.50090	155445
15.DMI.50100	155446
15.DMI.50110	155447
15.DMI.50120	155448
15.DMI.50125	155449
15.DMI.50150	155450
15.DMI.50160	155451
15.DMI.50175	155452
15.DMI.50200	155453
15.DMI.50225	155454
15.DMI.50250	155455
15.DMI.63005	155456
15.DMI.63010	155457
15.DMI.63015	155458
15.DMI.63020	155459
15.DMI.63025	155460

Order information

Type No.	Art. No.
15.DMI.63030	155461
15.DMI.63035	155462
15.DMI.63040	155463
15.DMI.63045	155464
15.DMI.63050	155465
15.DMI.63055	155466
15.DMI.63060	155467
15.DMI.63070	155468
15.DMI.63075	155469
15.DMI.63080	155470
15.DMI.63090	155471
15.DMI.63100	155472
15.DMI.63110	155473
15.DMI.63120	155474
15.DMI.63125	155475
15.DMI.63150	155476
15.DMI.63160	155477
15.DMI.63175	155478
15.DMI.63200	155479
15.DMI.63225	155480
15.DMI.63250	155481
15.DMI.80005	155482
15.DMI.80010	155483
15.DMI.80015	155484
15.DMI.80020	155485
15.DMI.80025	155486
15.DMI.80030	155487
15.DMI.80035	155488
15.DMI.80040	155489
15.DMI.80045	155490
15.DMI.80050	155491
15.DMI.80055	155492
15.DMI.80060	155493
15.DMI.80070	155494
15.DMI.80075	155495
15.DMI.80080	155496
15.DMI.80090	155497
15.DMI.80100	155498
15.DMI.80110	155499
15.DMI.80120	155500
15.DMI.80125	155501
15.DMI.80150	155502
15.DMI.80160	155503
15.DMI.80175	155504
15.DMI.80200	155505
15.DMI.80225	155506
15.DMI.80250	155507
15.DMI.80275	155508

Order information

Type No.	Art. No.
15.DMI.80300	155509
15.DMI.100005	155510
15.DMI.100010	155511
15.DMI.100015	155512
15.DMI.100020	155513
15.DMI.100025	155514
15.DMI.100030	155515
15.DMI.100035	155516
15.DMI.100040	155517
15.DMI.100045	155518
15.DMI.100050	155519
15.DMI.100055	155520
15.DMI.100060	155521
15.DMI.100070	155522
15.DMI.100075	155523
15.DMI.100080	155524
15.DMI.100090	155525
15.DMI.100100	155526
15.DMI.100110	155527
15.DMI.100120	155528
15.DMI.100125	155529
15.DMI.100150	155530
15.DMI.100160	155531
15.DMI.100175	155532
15.DMI.100200	155533
15.DMI.100225	155534
15.DMI.100250	155535
15.DMI.100275	155536
15.DMI.100300	155537
15.DMI.125005	155538
15.DMI.125010	155539
15.DMI.125015	155540
15.DMI.125020	155541
15.DMI.125025	155542
15.DMI.125030	155543
15.DMI.125035	155544
15.DMI.125040	155545
15.DMI.125045	155546
15.DMI.125050	155547
15.DMI.125055	155548
15.DMI.125060	155549
15.DMI.125070	155550
15.DMI.125075	155551
15.DMI.125080	155552
15.DMI.125090	155553
15.DMI.125100	155554
15.DMI.125110	155555
15.DMI.125120	155556

Order information

Type No.	Art. No.
15.DMI.125125	155557
15.DMI.125150	155558
15.DMI.125160	155559
15.DMI.125175	155560
15.DMI.125200	155561
15.DMI.125225	155562
15.DMI.125250	155563
15.DMI.125275	155564
15.DMI.125300	155565
15.DMA.12005	155566
15.DMA.12010	155567
15.DMA.12015	155568
15.DMA.12020	155569
15.DMA.12025	155570
15.DMA.12030	155571
15.DMA.12035	155572
15.DMA.12040	155573
15.DMA.12045	155574
15.DMA.12050	155575
15.DMA.16005	155576
15.DMA.16010	155577
15.DMA.16015	155578
15.DMA.16020	155579
15.DMA.16025	155580
15.DMA.16030	155581
15.DMA.16035	155582
15.DMA.16040	155583
15.DMA.16045	155584
15.DMA.16050	155585
15.DMA.16055	155586
15.DMA.16060	155587
15.DMA.16070	155588
15.DMA.16075	155589
15.DMA.20005	155590
15.DMA.20010	155591
15.DMA.20015	155592
15.DMA.20020	155593
15.DMA.20025	155594
15.DMA.20030	155595
15.DMA.20035	155596
15.DMA.20040	155597
15.DMA.20045	155598
15.DMA.20050	155590
15.DMA.20055	155600
15.DMA.20060	155601
15.DMA.20070	155602
15.DMA.20075	155603
15.DMA.20080	155604

Order information

Type No.	Art. No.
15.DMI.20090	155605
15.DMI.20100	155606
15.DMI.25005	155607
15.DMI.25010	155608
15.DMI.25015	155609
15.DMI.25020	155610
15.DMI.25025	155611
15.DMI.25030	155612
15.DMI.25035	155613
15.DMA.25040	155614
15.DMA.25045	155615
15.DMA.25050	155616
15.DMA.25055	155617
15.DMA.25060	155618
15.DMA.25070	155619
15.DMA.25075	155620
15.DMA.25080	155621
15.DMA.25090	155622
15.DMA.25100	155623
15.DMA.25110	155624
15.DMA.25120	155625
15.DMA.25125	155626
15.DMA.25150	155627
15.DMA.32005	155628
15.DMA.32010	155629
15.DMA.32015	155630
15.DMA.32020	155631
15.DMA.32025	155632
15.DMA.32030	155633
15.DMA.32035	155634
15.DMA.32040	155635
15.DMA.32045	155636
15.DMA.32050	155637
15.DMA.32055	155638
15.DMA.32060	155639
15.DMA.32070	155640
15.DMA.32075	155641
15.DMA.32080	155642
15.DMA.32090	155643
15.DMA.32100	155644
15.DMA.32110	155645
15.DMA.32120	155646
15.DMA.32125	155647
15.DMA.32150	155648
15.DMA.32160	155649
15.DMA.32175	155650
15.DMA.32200	155651
15.DMA.40005	155652

Order information

Type No.	Art. No.
15.DMA.40010	155653
15.DMA.40015	155654
15.DMA.40020	155655
15.DMA.40025	155656
15.DMA.40030	155657
15.DMA.40035	155658
15.DMA.40040	155659
15.DMA.40045	155660
15.DMA.40050	155661
15.DMA.40055	155662
15.DMA.40060	155663
15.DMA.40070	155664
15.DMA.40075	155665
15.DMA.40080	155666
15.DMA.40090	155667
15.DMA.40100	155668
15.DMA.40110	155669
15.DMA.40120	155670
15.DMA.40125	155671
15.DMA.40150	155672
15.DMA.40150	155673
15.DMA.40175	155674
15.DMA.40200	155675
15.DMA.50005	155676
15.DMA.50010	155677
15.DMA.50015	155678
15.DMA.50020	155679
15.DMA.50025	155680
15.DMA.50030	155681
15.DMA.50035	155682
15.DMA.50040	155683
15.DMA.50045	155684
15.DMA.50050	155685
15.DMA.50055	155686
15.DMA.50060	155687
15.DMA.50070	155688
15.DMA.50075	155689
15.DMA.50080	155690
15.DMA.50090	155691
15.DMA.50100	155692
15.DMA.50110	155693
15.DMA.50120	155694
15.DMA.50125	155695
15.DMA.50150	155696
15.DMA.50160	155697
15.DMA.50175	155698
15.DMA.50200	155699
15.DMA.50225	155700

Order information

Type No.	Art. No.
15.DMA.50250	155701
15.DMA.63005	155702
15.DMA.63010	155703
15.DMA.63015	155704
15.DMA.63020	155705
15.DMA.63025	155706
15.DMA.63030	155707
15.DMA.63035	155708
15.DMA.63040	155709
15.DMA.63045	155710
15.DMA.63050	155711
15.DMA.63055	155712
15.DMA.63060	155713
15.DMA.63070	155714
15.DMA.63075	155715
15.DMA.63080	155716
15.DMA.63090	155717
15.DMA.63100	155718
15.DMA.63110	155719
15.DMA.63120	155720
15.DMA.63125	155721
15.DMA.63150	155722
15.DMA.63160	155723
15.DMA.63175	155724
15.DMA.63200	155725
15.DMA.63225	155726
15.DMA.63250	155727
15.DMA.80005	155728
15.DMA.80010	155729
15.DMA.80015	155730
15.DMA.80020	155731
15.DMA.80025	155732
15.DMA.80030	155733
15.DMA.80035	155734
15.DMA.80040	155735
15.DMA.80045	155736
15.DMA.80050	155737
15.DMA.80055	155738
15.DMA.80060	155739
15.DMA.80070	155740
15.DMA.80075	155741
15.DMA.80080	155742
15.DMA.80090	155743
15.DMA.80100	155744
15.DMA.80110	155745
15.DMA.80120	155746
15.DMA.80125	155747
15.DMA.80150	155748

Order information

Type No.	Art. No.
15.DMA.80160	155749
15.DMA.80175	155750
15.DMA.80200	155751
15.DMA.80225	155752
15.DMA.80250	155753
15.DMA.80275	155754
15.DMA.80300	155755
15.DMA.100005	155756
15.DMA.100010	155757
15.DMA.100015	155758
15.DMA.100020	155759
15.DMA.100025	155760
15.DMA.100030	155761
15.DMA.100035	155762
15.DMA.100040	155763
15.DMA.100045	155764
15.DMA.100050	155765
15.DMA.100055	155766
15.DMA.100060	155767
15.DMA.100070	155768
15.DMA.100075	155769
15.DMA.100080	155770
15.DMA.100090	155771
15.DMA.100100	155772
15.DMA.100110	155773
15.DMA.100120	155774
15.DMA.100125	155775
15.DMA.100150	155776
15.DMA.100160	155777
15.DMA.100175	155778
15.DMA.100200	155779
15.DMA.100225	155780
15.DMA.100250	155781
15.DMA.100275	155782
15.DMA.100300	155783
15.DMA.125005	155784
15.DMA.125010	155785
15.DMA.125015	155786
15.DMA.125020	155787
15.DMA.125025	155788
15.DMA.125030	155789
15.DMA.125035	155790
15.DMA.125040	155791
15.DMA.125045	155792
15.DMA.125050	155793
15.DMA.125055	155794
15.DMA.125060	155795
15.DMA.125070	155796

Order information

Type No.	Art. No.
15.DMA.125075	155797
15.DMA.125080	155798
15.DMA.125090	155799
15.DMA.125100	155800
15.DMA.125110	155801
15.DMA.125120	155802
15.DMA.125125	155803
15.DMA.125150	155804
15.DMA.125160	155805
15.DMA.125175	155806
15.DMA.125200	155807
15.DMA.125225	155808
15.DMA.125250	155809
15.DMA.125275	155810
15.DMA.125300	155811

»ASE« type

15.EMI.12005 to 15.EMI.100025 and 15.EMA.12005 to 15.EMA.100025

Order information

Type No.	Art. No.
15.EMI.12005	155812
15.EMI.12010	155813
15.EMI.16005	155814
15.EMI.16010	155815
15.EMI.16015	155816
15.EMI.16020	155817
15.EMI.16025	155818
15.EMI.20005	155819
15.EMI.20010	155820
15.EMI.20015	155821
15.EMI.20020	155822
15.EMI.20025	155823
15.EMI.25005	155824
15.EMI.25010	155825
15.EMI.25015	155826
15.EMI.25020	155827
15.EMI.25025	155828
15.EMI.32005	155829
15.EMI.32010	155830
15.EMI.32015	155831
15.EMI.32020	155832
15.EMI.32025	155833
15.EMI.40005	155834
15.EMI.40010	155835
15.EMI.40015	155836
15.EMI.40020	155837
15.EMI.40025	155838
15.EMI.50005	155839
15.EMI.50010	155840
15.EMI.50015	155841
15.EMI.50020	155842
15.EMI.50025	155843
15.EMI.63005	155844
15.EMI.63010	155845
15.EMI.63015	155846
15.EMI.63020	155847
15.EMI.63025	155848
15.EMI.80005	155849
15.EMI.80010	155850
15.EMI.80015	155851
15.EMI.80020	155852
15.EMI.80025	155853
15.EMI.100005	155854
15.EMI.100010	155855
15.EMI.100015	155856
15.EMI.100020	155857
15.EMI.100025	155858

Order information

Type No.	Art. No.
15.EMA.12005	155859
15.EMA.12010	155860
15.EMA.16005	155861
15.EMA.16010	155862
15.EMA.16015	155863
15.EMA.16020	155864
15.EMA.16025	155865
15.EMA.20005	155866
15.EMA.20010	155867
15.EMA.20015	155868
15.EMA.20020	155869
15.EMA.20025	155870
15.EMA.25005	155871
15.EMA.25010	155872
15.EMA.25015	155873
15.EMA.25020	155874
15.EMA.25025	155875
15.EMA.32005	155876
15.EMA.32010	155877
15.EMA.32015	155878
15.EMA.32020	155879
15.EMA.32025	155880
15.EMA.40005	155881
15.EMA.40010	155882
15.EMA.40015	155883
15.EMA.40020	155884
15.EMA.40025	155885
15.EMA.50005	155886
15.EMA.50010	155887
15.EMA.50015	155888
15.EMA.50020	155889
15.EMA.50025	155890
15.EMA.63005	155891
15.EMA.63010	155892
15.EMA.63015	155893
15.EMA.63020	155894
15.EMA.63025	155895
15.EMA.80005	155896
15.EMA.80010	155897
15.EMA.80015	155898
15.EMA.80020	155899
15.EMA.80025	155900
15.EMA.100005	155901
15.EMA.100010	155902
15.EMA.100015	155903
15.EMA.100020	155904
15.EMA.100025	155905

»ATE« type

15.AMI.12005 to 15.AMI.100025 and 15.AMA.12005 to 15.AMA.100025

Order information

Type No.	Art. No.
15.AMI.12005	155906
15.AMI.12010	155907
15.AMI.16005	155908
15.AMI.16010	155909
15.AMI.16015	155910
15.AMI.16020	155911
15.AMI.16025	155912
15.AMI.20005	155913
15.AMI.20010	155914
15.AMI.20015	155915
15.AMI.20020	155916
15.AMI.20025	155917
15.AMI.25005	155918
15.AMI.25010	155919
15.AMI.25015	155920
15.AMI.25020	155921
15.AMI.25025	155922
15.AMI.32005	155923
15.AMI.32010	155924
15.AMI.32015	155925
15.AMI.32020	155926
15.AMI.32025	155927
15.AMI.40005	155928
15.AMI.40010	155929
15.AMI.40015	155930
15.AMI.40020	155931
15.AMI.40025	155932
15.AMI.50005	155933
15.AMI.50010	155934
15.AMI.50015	155935
15.AMI.50020	155936
15.AMI.50025	155937
15.AMI.63005	155938
15.AMI.63010	155939
15.AMI.63015	155940
15.AMI.63020	155941
15.AMI.63025	155942
15.AMI.80005	155943
15.AMI.80010	155944
15.AMI.80015	155945
15.AMI.80020	155946
15.AMI.80025	155947
15.AMI.100005	155948
15.AMI.100010	155949
15.AMI.100015	155950
15.AMI.100020	155951
15.AMI.100025	155952

Order information

Type Nr.	Art. No.
15.AMA.12005	155953
15.AMA.12010	155954
15.AMA.16005	155955
15.AMA.16010	155956
15.AMA.16015	155957
15.AMA.16020	155958
15.AMA.16025	155959
15.AMA.20005	155960
15.AMA.20010	155961
15.AMA.20015	155962
15.AMA.20020	155963
15.AMA.20025	155964
15.AMA.25005	155965
15.AMA.25010	155966
15.AMA.25015	155967
15.AMA.25020	155968
15.AMA.25025	155969
15.AMA.32005	155970
15.AMA.32010	155971
15.AMA.32015	155972
15.AMA.32020	155973
15.AMA.32025	155974
15.AMA.40005	155975
15.AMA.40010	155976
15.AMA.40015	155977
15.AMA.40020	155978
15.AMA.40025	155979
15.AMA.50005	155980
15.AMA.50010	155981
15.AMA.50015	155982
15.AMA.50020	155983
15.AMA.50025	155984
15.AMA.63005	155985
15.AMA.63010	155986
15.AMA.63015	155987
15.AMA.63020	155988
15.AMA.63025	155989
15.AMA.80005	155990
15.AMA.80010	155991
15.AMA.80015	155992
15.AMA.80020	155993
15.AMA.80025	155994
15.AMA.100005	155995
15.AMA.100010	155996
15.AMA.100015	155997
15.AMA.100020	155998
15.AMA.100025	155999