Compact cylinder

acc. to ISO 21287 Ø 20 – 100

PLUS

Art. No. **193083**

Type No. **7.DMV.32050**

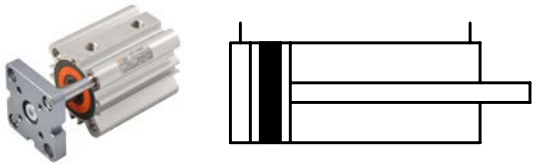

Exemplary illustration

New series acc. to ISO 21287 characterised by a very short and compact design.
The standard type features double-acting with a magnetic piston.
Available as a non-anti-rotation version with a choice of female or male thread, or as an anti-rotation version with a female thread.
Suitable for filtered, unlubricated or lubricated compressed air.
If lubrication is used, it must be continuous.

Further versions available on request.

Technical data

Series	LINER series
Version	anti-rotation version
Piston Ø	32 mm
Stroke	50 mm
Standard	acc. to ISO 21287
Function	double-acting
Magnet	with magnet
Connection	G 1/8
Piston rod thread	M8 IT
Medium	filtered compressed air with or without lubrication. If lubricated, then continuous.
Min. set pressure	0.6 bar
Working pressure	max. 10 bar
Temperature range	-10 to 60 °C
Piston rod	C45 steel, hard chrome-plated
Tube	anodised aluminium jacket with T-slots
Piston	POM
Piston gasket	PU

RIEGLER & Co. KG
Schützenstraße 27
72574 Bad Urach
Tel. +49 7125 9497-642
technik@riegler.de

Subject to technical changes and errors reserved.
The proficiency testing is the responsibility of the user.
16.10.2026 The specified data do not represent legally guaranteed properties.

Technical data

Piston rod gasket	PU
Static O-rings	NBR

For proper operation, it is recommended to use compressed air filtered to ≤ 50 µm.

Commercial data

Customs tariff number	84123100
Country of origin	IT
eCl@ss 5.1.4	27290301
eCl@ss 9.0	27290301
UNSPSC_Code_v190501	27131701
UNSPSC_CodeDesc_v190501	Pneumatic cylinders

ISO 21287 CYLINDER SERIES LINER

Compact cylinder to ISO 21287, LINER series, available in different versions to meet all possible requirements:

- With or without magnet
- Double acting, single or through piston rod
- Double acting, perforated through piston rod
- Single acting, extended, retracted or through piston rod
- Single acting, perforated through rod
- Double acting anti-rotating version and double acting through piston rod
- Polyurethane or FKM/FPM gaskets (for high temperatures) also available
- Dimensions and centre distances to ISO 21287.

The heads have been eliminated for ease of installation, improved sturdiness and precision. The metal lining is designed to withstand heavy-duty work, tensile stress and impact. Technopolymer parts can withstand dynamic and pneumatic thrust. The lining virtually acts as a "bearing" to which most of user accessories are attached.
The wide range of anchors provide numerous fixing points.
Retractable magnetic limit switches can be mounted to identify the position in the cylinder grooves.



TECHNICAL DATA			Ø20	Ø25	Ø32	Ø40	Ø50	Ø63	Ø80	Ø100
Max operating pressure		bar	10							
		MPa	1							
		psi	145							
Temperature range	POLYURETHANE	°C	−10 to +60						−10 to +80	
	FKM/FPM	°C	−10 to +150 (non-magnetic cylinders)							
Design			With profile							
Fixing centre distances			According to ISO 21287							
Fluid			Unlubricated air. Lubrication, if used, must be continuous							
Versions			Double-acting, Double-acting through-rod, Single-acting extended or retracted rod, Single-acting through-rod, Single-acting through piston rod perforated, Double-acting through-rod perforated, Double-acting non-rotating, Double-acting through-rod non-rotating, No stick-slip. All versions are available with male or female piston rod.							
Sensor magnet			Available magnetic and non-magnetic versions.							
Inrush pressure	single piston rod	bar	0.6	0.6	0.6	0.4	0.4	0.4	0.4	0.4
	through-rod	bar	0.8	0.8	0.6	0.4	0.4	0.4	0.4	0.4
Forces generated at 6 bar thrust/retraction			See cylinder "**General technical data**" at the beginning of the chapter							
Weights			See cylinder "**General technical data**" at the beginning of the chapter							
Notes			For correct operation, it is advisable to use 50 µm filtered air **For speeds lower than 0.2 m/s to prevent surging, use the version No stick-slip and non-lubricated air.**							

COMPONENTS Ø 20-25

① PISTON ROD: stainless steel, thick chromed
② END CAP: high-performance technopolymer
③ BARREL: drawn anodized and calibrated aluminium alloy
④ PISTON GASKET: polyurethane or FKM/FPM (for high temperature)
⑤ MAGNET: plastoneodimio
⑥ PISTON ROD GASKET: polyurethane or FKM/FPM (for high temperature)
⑦ GUIDE BUSHING: sintered bronze
⑧ STATIC O-RINGS: NBR or FKM/FPM (for high temperature)

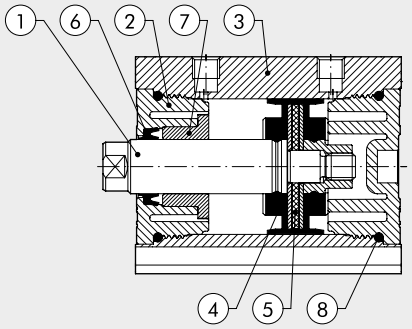

RIEGLER & Co. KG
Schützenstraße 27
72574 Bad Urach
Tel. +49 7125 9497-642
technik@riegler.de

Subject to technical changes and errors reserved.
The proficiency testing is the responsibility of the user.
16.10.2026 The specified data do not represent legally guaranteed properties.

COMPONENTS Ø 32-63

① PISTON ROD: C45 stell or stainless steel, thick chromed
② END CAP: high-performance technopolymer
③ BARREL: drawn anodized and calibrated aluminium alloy
④ PISTON GASKET: polyurethane or FKM/FPM (for high temperature)
⑤ MAGNET: Ø 32 plastoneodimio - Ø 40 to 63 plastoferrite
⑥ PISTON ROD GASKET: polyurethane or FKM/FPM (for high temperature)
⑦ GUIDE BUSHING: sintered bronze
⑧ STATIC O-RINGS: NBR or FKM/FPM (for high temperature)

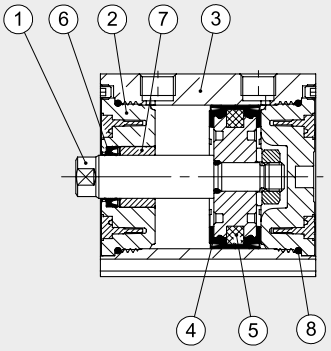

COMPONENTS Ø 80-100

① PISTON ROD: C45 stell or stainless steel, thick chromed
② END CAP: anodized aluminium alloy
③ BARREL: drawn anodized and calibrated aluminium alloy
④ PISTON GASKET: polyurethane or FKM/FPM (for high temperature)
⑤ MAGNET: plastoferrite
⑥ PISTON ROD GASKET: polyurethane or FKM/FPM (for high temperature)
⑦ GUIDE BUSHING: steel strip with bronze and PTFE insert
⑧ STATIC O-RINGS: NBR or FKM/FPM (for high temperature)

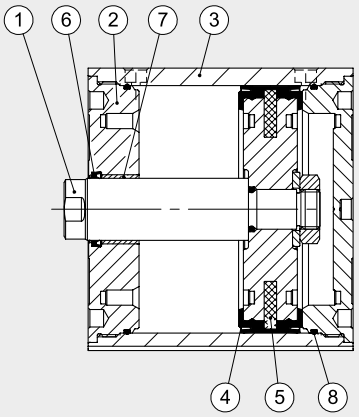

FIXING OPTIONS

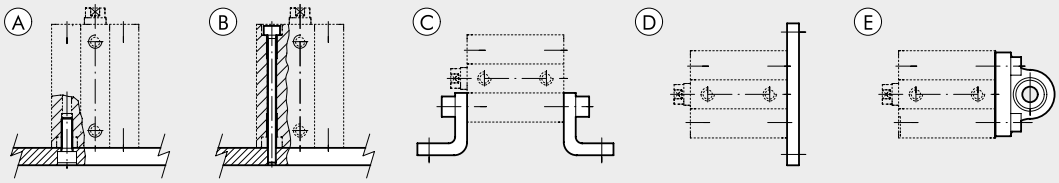

Ⓐ Fixing to structural work with a through screw, using the thread in the heads
Ⓑ Direct fixing from above using long through screws or tie rods. Non-magnetic stainless steel must be used (e.g. AISI 304)
Ⓒ Fixing with feet; the ordering code covers the supply of one foot and two screws for fixing to the cylinder
Ⓓ Fixing with a flange mounted on the front or rear head; the ordering code covers the supply of a flange and four screws for fixing to the cylinder
Ⓔ Fixing with articulated hinge to compensate for slight system misalignment and turn freely
The ordering code covers the supply of a hinge and four screws for fixing to the cylinder.

RIEGLER & Co. KG
Schützenstraße 27
72574 Bad Urach
Tel. +49 7125 9497-642
technik@riegler.de

Subject to technical changes and errors reserved.
The proficiency testing is the responsibility of the user.
16.10.2026 The specified data do not represent legally guaranteed properties.

FORCE OF SPRINGS IN SINGLE-ACTING CYLINDERS (THEORETICAL)

Bore	Ø 20	Ø 25	Ø 32	Ø 40	Ø 50	Ø 63	Ø 80	Ø 100
Min. load (N)	8.40	13.90	19.00	24.80	36.30	50.20	77.60	131.80
Max. load (N)	20.90	33.20	35.90	53.70	62.20	82.30	118.90	183.30

STROKES FOR COMPACT CYLINDERS ISO 21287

Standard stroke for single-acting cylinders	Standard stroke for other types	Max. recommended strokes for other types	Max. recommended strokes for non-rotating cylinders	Max recommended strokes for through-rod perforated
Ø 20 to 100 → from 1 to 25 mm	Ø 20 to 25 → from 1 to 60 mm	Ø 20 to 25 → 300 mm	Ø 20 to 63 → 120 mm	Ø 20 to 40 → from 1 to 80 mm
	Ø 32 to 100 → from 1 to 80 mm	Ø 32 to 63 → 400 mm	Ø 80 to 100 → 150 mm	Ø 50 to 63 → from 1 to 100 mm
		Ø 80 to 100 → 500 mm		Ø 80 to 100 → from 1 to 160 mm

Maximum recommended strokes. Higher values can create operating problems

MAXIMUM LOADS FOR NON-ROTATING VERSION

TRANSVERSAL FORCE FOR NON-ROTATING

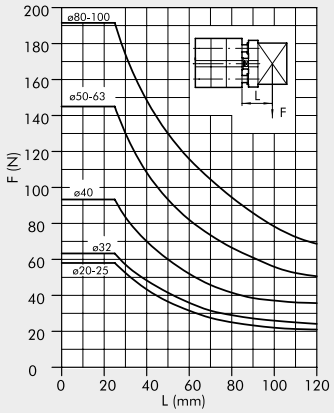

TRANSVERSAL FORCE FOR NON-ROTATING THROUGH-ROD

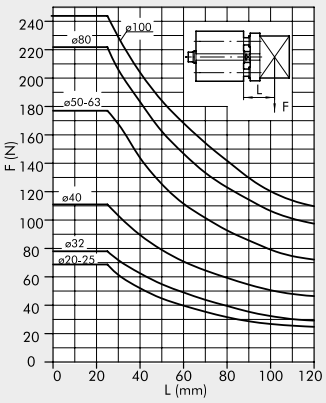

TORQUE DEPENDING ON STROKE

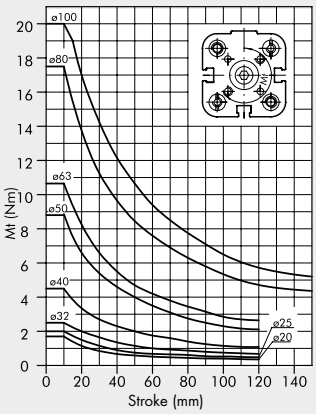

RIEGLER & Co. KG
Schützenstraße 27
72574 Bad Urach
Tel. +49 7125 9497-642
technik@riegler.de

Subject to technical changes and errors reserved.
The proficiency testing is the responsibility of the user.
16.10.2026 The specified data do not represent legally guaranteed properties.

DIMENSIONS OF DOUBLE-ACTING Ø 20 to 50 AND SINGLE-ACTING Ø 20 to 50

SE-DE MALE PISTON ROD

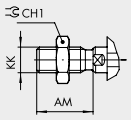

SE EXTENDED PISTON ROD

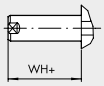

SE MALE EXTENDED PISTON ROD

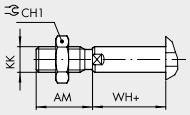

\+ = ADD THE STROKE
* = SECTION WITH TOLERANCE
1 = SENSOR SLOT
2 = SEAT FOR DIN 7984 SCREWS

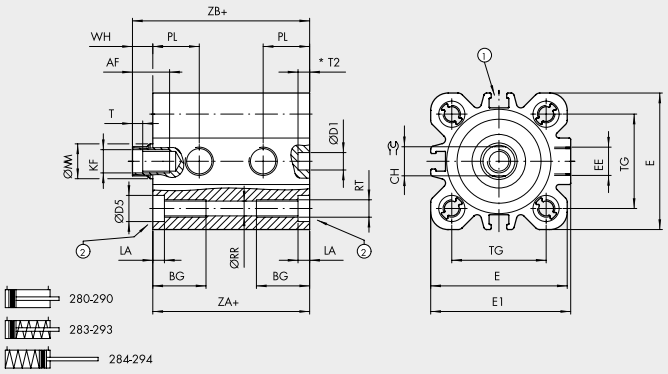

Ø	AF	AM	BG	CH	CH1	ØD1 H9	ØD5	E	E1	EE	KF	KK	LA	ØMM	PL	ØRR	RT	T	T2	TG ±0.2	WH	ZA 0 +0.3	ZB
20	14	16	17.5	8	13	6	7.5	35.5	36.5	M5	M6	M8	4.2	10	12	4.2	M5	2.5	3	22	6	37	43
25	14	16	17.5	8	13	6	7.5	39.5	40	M5	M6	M8	4.2	10	13	4.2	M5	2.5	3.5	26	6	39	45
32	16.5	19	21.5	10	17	6	9	47	48.2	G1/8	M8	M10x1.25	4	12	16	5.1	M6	3.5	4	32.5	7	44	51
40	16.5	19	21.5	10	17	6	9	55.5	56.5	G1/8	M8	M10x1.25	4	12	16	5.1	M6	3.5	4	38	7	45	52
50	17	22	21	13	19	6	10.5	66.5	67.8	G1/8	M10	M12x1.25	4.5	16	15.5	6.8	M8	4	3	46.5	8	45	53

DIMENSIONS OF DOUBLE-ACTING Ø 63 to 100 AND SINGLE-ACTING Ø 63 to 100

SE-DE MALE PISTON ROD

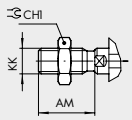

SE EXTENDED PISTON ROD

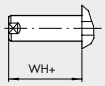

SE MALE EXTENDED PISTON ROD

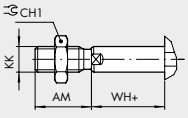

\+ = ADD THE STROKE
* = SECTION WITH TOLERANCE
1 = SENSOR SLOT
2 = SEAT FOR DIN 7984 SCREWS

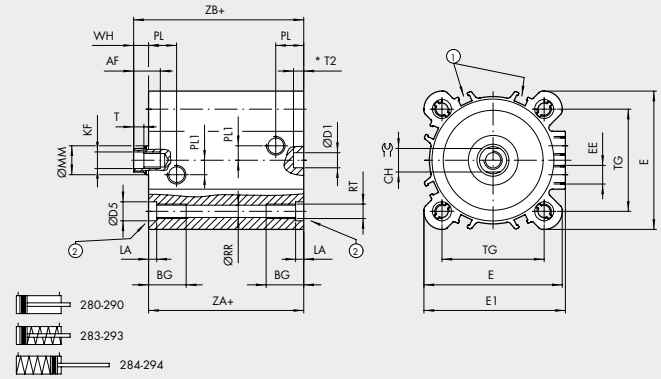

Ø	AF	AM	BG	CH	CH1	ØD1 H9	ØD5	E	E1	EE	KF	KK	LA	ØMM	PL1	PL	ØRR	RT	T	T2	TG ±0.2	WH	ZA 0 +0.4	ZB
63	17	22	21	13	19	8	10.5	76.5	78.3	G1/8	M10	M12x1.25	4.5	16	8	15.5	6.8	M8	4	3.5	56.5	8	49	57
80	22	28	22.5	17	24	8	14	95.5	95.5	G1/8	M12	M16x1.5	5	20	14	16.5	8.5	M10	5	4	72	10	54	64
100	24	28	25.5	22	30	8	14	114	114	G1/8	M12	M16x1.5	5	25	19	19.2	8.5	M10	5	4	89	10	67	77

RIEGLER & Co. KG
Schützenstraße 27
72574 Bad Urach
Tel. +49 7125 9497-642
technik@riegler.de

Subject to technical changes and errors reserved.
The proficiency testing is the responsibility of the user.
16.10.2026 The specified data do not represent legally guaranteed properties.

DIMENSIONS OF THROUGH-ROD Ø 20 to 50

SE-DE MALE PERFORATED THROUGH-ROD

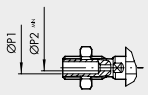

\+ = ADD THE STROKE
++ = ADD TWICE THE STROKE
1 = SENSOR SLOT
2 = SEAT FOR DIN 7984 SCREWS

SE-DE MALE PISTON ROD

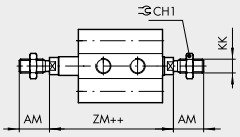

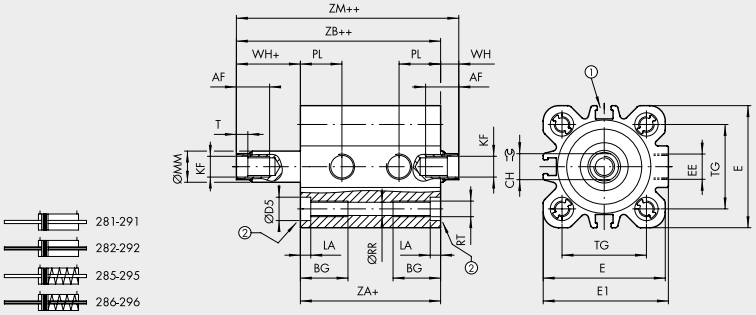

Ø	AF	AM	BG	CH	CH1	ØD5	E	E1	EE	KF	KK	LA	ØMM	ØP1	ØP2	PL	ØRR	RT	T	TG$^{\pm0.2}$	WH	ZA$_0^{+0.3}$	ZB	ZM
20	14	16	17.5	8	13	7.5	35.5	36.5	M5	M6	M8	4.2	10	3	1.5	12	4.2	M5	2.5	22	6	37	43	49
25	14	16	17.5	8	13	7.5	39.5	40	M5	M6	M8	4.2	10	3	1.5	13	4.2	M5	2.5	26	6	39	45	51
32	16.5	19	21.5	10	17	9	47	48.2	G1/8	M8	M10x1.25	4	12	4	2.5	16	5.1	M6	3.5	32.5	7	44	51	58
40	16.5	19	21.5	10	17	9	55.5	56.5	G1/8	M8	M10x1.25	4	12	4	2.5	16	5.1	M6	3.5	38	7	45	52	59
50	17	22	21	13	19	10.5	66.5	67.8	G1/8	M10	M12x1.25	4.5	16	6	4	15.5	6.8	M8	4	46.5	8	45	53	61

DIMENSIONS OF THROUGH-ROD Ø 63 to 100

SE-DE MALE PERFORATED THROUGH-ROD

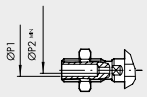

\+ = ADD THE STROKE
++ = ADD TWICE THE STROKE
1 = SENSOR SLOT
2 = SEAT FOR DIN 7984 SCREWS

SE-DE MALE PISTON ROD

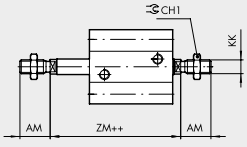

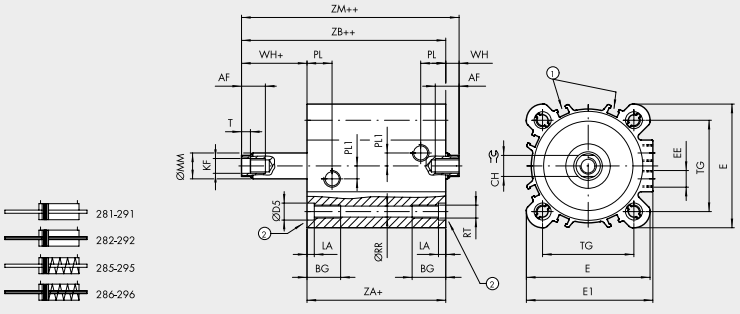

Ø	AF	AM	BG	CH	CH1	ØD5	E	E1	EE	KF	KK	LA	ØMM	ØP1	ØP2	PL1	PL	ØRR	RT	T	TG$^{\pm0.2}$	WH	ZA$_0^{+0.4}$	ZB	ZM
63	17	22	21	13	19	10.5	76.5	78.3	G1/8	M10	M12x1.25	4.5	16	6	4	8	15.5	6.8	M8	4	56.5	8	49	57	65
80	22	28	22.5	17	24	14	95.5	95.5	G1/8	M12	M16x1.5	5	20	G1/8	5	14	16.5	8.5	M10	5	72	10	54	64	74
100	24	28	25.5	22	30	14	114	114	G1/8	M12	M16x1.5	5	25	G1/8	6	19	19.2	8.5	M10	5	89	10	67	77	87

RIEGLER & Co. KG
Schützenstraße 27
72574 Bad Urach
Tel. +49 7125 9497-642
technik@riegler.de

Subject to technical changes and errors reserved.
The proficiency testing is the responsibility of the user.
16.10.2026 The specified data do not represent legally guaranteed properties.

DIMENSIONS OF NON-ROTATING Ø 20 to 50

\+ = ADD THE STROKE
* = SECTION WITH TOLERANCE
1 = SENSOR SLOT
2 = SEAT FOR DIN 7984 SCREWS

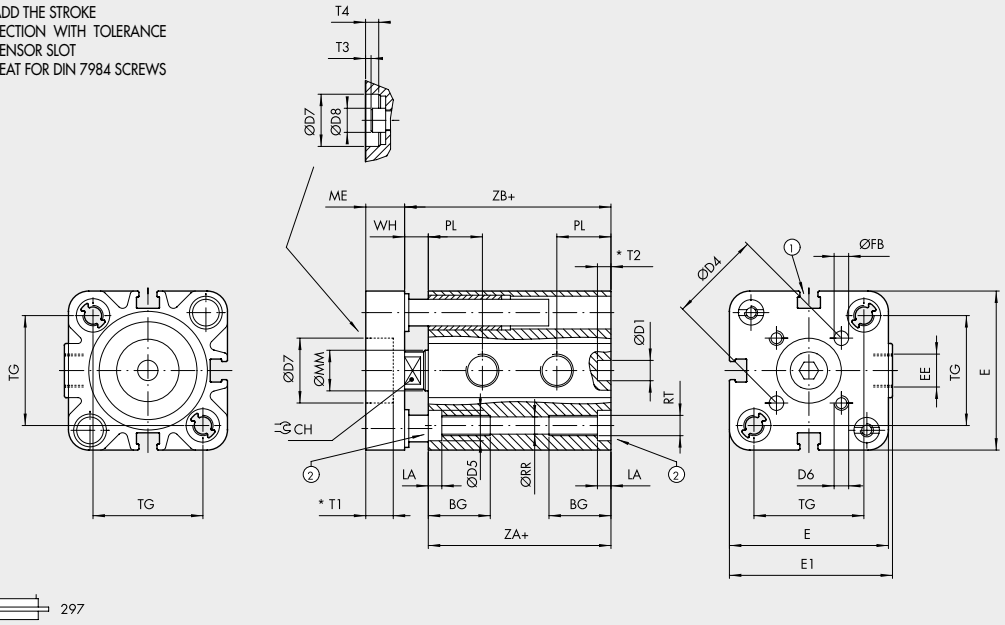

297

NON-ROTATING FEMALE THROUGH-ROD

\+ = ADD THE STROKE
++ = ADD TWICE THE STROKE

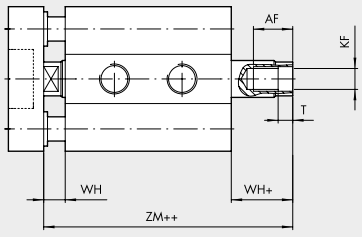

29A

NON-ROTATING MALE THROUGH-ROD

\+ = ADD THE STROKE
++ = ADD TWICE THE STROKE

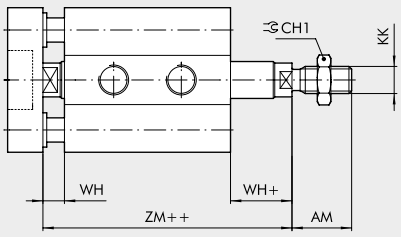

28A

Ø	AF	AM	BG	CH	CH1	ØD1 H9	ØD4	ØD5	D6	ØD7 H9	ØD8	E	E1	EE	ØFB	KF	KK	LA	ME	ØMM	PL	ØRR	RT	T	T1	T2	T3	T4
20	14	16	17.5	8	13	6	17	7.5	M4	-	-	35.5	36.5	M5	4	M6	M8	4.2	8	10	12	4.2	M5	2.5	-	3	-	-
25	14	16	17.5	8	13	6	22	7.5	M5	14	10	39.5	40	M5	5	M6	M8	4.2	8	10	13	4.2	M5	2.5	3.5	3.5	1	3.5
32	16.5	19	21.5	10	17	6	28	9	M5	17	13	47	48.2	G1/8	5	M8	M10x1.25	4	10	12	16	5.1	M6	3.5	3.5	4	1	3.5
40	16.5	19	21.5	10	17	6	33	9	M5	17	13	55.5	56.5	G1/8	5	M8	M10x1.25	4	10	12	16	5.1	M6	3.5	3.5	4	1	3.5
50	17	22	21	13	19	6	42	10.5	M6	22	16	66.5	67.8	G1/8	6	M10	M12x1.25	4.5	12	16	15.5	6.8	M8	4	5	3	1.5	5

Ø	TG ±0.2	WH	ZA +0.3 0	ZB	ZM
20	22	6	37	43	49
25	26	6	39	45	51
32	32.5	7	44	51	58
40	38	7	45	52	59
50	46.5	8	45	53	61

RIEGLER & Co. KG
Schützenstraße 27
72574 Bad Urach
Tel. +49 7125 9497-642
technik@riegler.de

Subject to technical changes and errors reserved.
The proficiency testing is the responsibility of the user.
16.10.2026 The specified data do not represent legally guaranteed properties.

DIMENSIONS OF NON-ROTATING Ø 63 to 100

\+ = ADD THE STROKE
* = SECTION WITH TOLERANCE
1 = SENSOR SLOT
2 = SEAT FOR DIN 7984 SCREWS

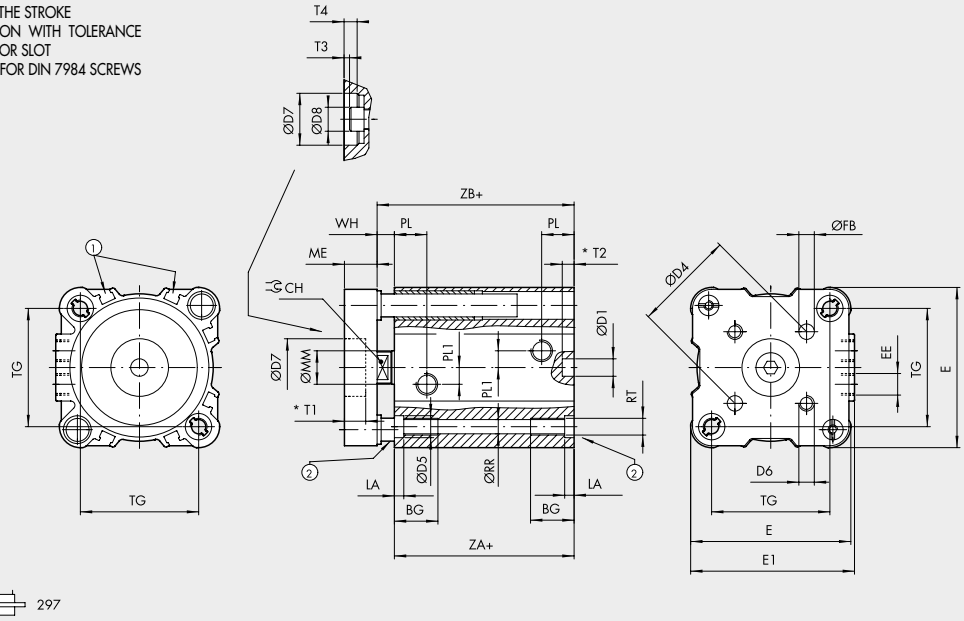

297

NON-ROTATING FEMALE THROUGH-ROD

\+ = ADD THE STROKE
++ = ADD TWICE THE STROKE

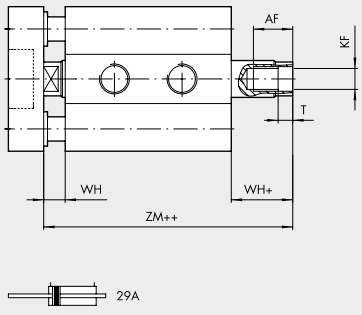

29A

NON-ROTATING MALE THROUGH-ROD

\+ = ADD THE STROKE
++ = ADD TWICE THE STROKE

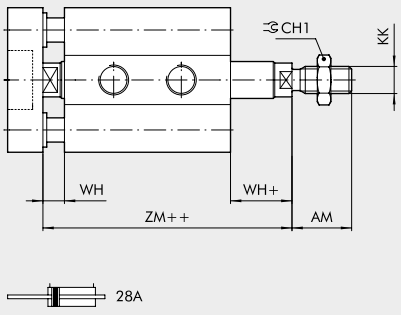

28A

Ø	AF	AM	BG	CH	CH1	ØD1 H9	ØD4	ØD5	D6	ØD7 H9	ØD8	E	E1	EE	ØFB	KF	KK	LA	ME	ØMM	PL1	PL	ØRR	RT	T	T1	T2	T3
63	17	22	21	13	19	8	50	10.5	M6	22	16	76.5	78.3	G1/8	6	M10	M12x1.25	4.5	12	16	8	15.5	6.8	M8	4	5	3.5	1.5
80	22	28	22.5	17	24	8	65	14	M8	24	18	95.5	95.5	G1/8	8	M12	M16x1.5	5	14	20	14	16.5	8.5	M10	5	7.5	4	3.5
100	24	28	25.5	22	30	8	80	14	M10	24	18	114	114	G1/8	10	M12	M16x1.5	5	14	25	19	19.2	8.5	M10	5	7.5	4	3.5

Ø	T4	TG ±0.2	WH	ZA 0 -0.4	ZB	ZM
63	5	56.5	8	49	57	65
80	7.5	72	10	54	64	74
100	7.5	89	10	67	77	87

RIEGLER & Co. KG
Schützenstraße 27
72574 Bad Urach
Tel. +49 7125 9497-642
technik@riegler.de

Subject to technical changes and errors reserved.
The proficiency testing is the responsibility of the user.
16.10.2026 The specified data do not represent legally guaranteed properties.

KEY TO CODE

CYL	28	0	0	20	0	050	X	P
	TYPE			BORE		STROKE **	MATERIAL	GASKETS
	28 Compact cylinder ISO 21287 male piston rod **29** Compact cylinder ISO 21287 female piston rod	**0** Double-acting **1** Double-acting through-rod **2** Double-acting through-rod perforated ● **3** Single-acting retracting piston rod ● **4** Single-acting extended piston rod ● **5** Single-acting through-rod ● **6** Single-acting through piston rod perforated ▼ **7** Double-acting non-rotating **A** Double-acting through-rod non-rotating	**0** Magnetic □ **S** Non-magnetic ▲ **G** No stick-slip	20 25 32 40 50 63 80 ◆ 100	**0** Standard		✱ **C** C45 piston rod chromium-plated ▷ **X** Stainless steel piston rod and nut ◁ **A** C45 chromed piston rod, aluminium piston ○ **Z** Stainless steel piston rod and nut aluminium piston	**P** Polyurethane gaskets ▶ **V** FKM/FPM gaskets

** For the maximum suppliabe stroke, see page **A1**.101
● Can also be used as double-acting with spring return
▼ For versions 29 only (female piston rod)
▲ For Ø 12 to 25 the standard version (0 or S) it's already No stick-slip
For Ø 20 to 100 version with gaskets in FKM / FPM (0 or S) is already "No stick-slip"
For speeds lower than 0.2 m/s, to prevent surging. Use no-lubricated air only
◆ In the code of cylinder with letter in fourth position Ø 100 becomes A1
▶ Only for standard double acting and standard through rod double acting version (for Ø20 and Ø25 only "non-magnetic" version provided)
□ Compulsory for Ø 20 and Ø 25 version Z
✱ Only for Ø 32 to 63 P version (Polyurethane gaskets)
▷ Only for Ø 20 to 63 P version (Polyurethane gaskets)
◁ Only for Ø 32 to 100 V version (FKM/FPM gaskets) and for Ø 80 and 100 P version (Polyurethane gaskets)
○ Only for Ø 20 to 100 V version (FKM/FPM gaskets) and for Ø 80 and 100 P version (Polyurethane gaskets)

NOTES

RIEGLER & Co. KG
Schützenstraße 27
72574 Bad Urach
Tel. +49 7125 9497-642
technik@riegler.de

Subject to technical changes and errors reserved.
The proficiency testing is the responsibility of the user.
16.10.2026 The specified data do not represent legally guaranteed properties.

ACCESSORIES FOR ISO 21287 CYLINDERS: FIXING

FOOT - MODEL A

+ = ADD THE STROKE

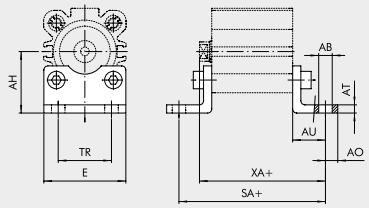

Code	Ø	ØAB	AH	AO	AT	AU	E	SA	TR	XA	Weight [g]
W0950206001	20	6.6	27	6	4	16	36	69	22	59	46
W0950256001	25	6.6	30*	6	4	16	40	71	26	61	52
W0950322001	32	7	32*	11*	4	24*	45	92*	32	75*	76
W0950402001	40	9	36*	15*	4	28*	52	101*	36	80*	100
W0950502001	50	9	45	15*	5	32*	65	109*	45	85*	162
W0950632001	63	9	50	15*	5	32*	75	113*	50	89*	266
W0950802001	80	12	63	20*	6	41*	95	136*	63	105*	456
W0951002001	100	14	71*	25*	6	41*	115	149*	75	118*	572

Note: Individually packed with 2 screws.
* **IMPORTANT:** Values not to ISO 21287. Cylinder pins to ISO 15552 are used.

FEMALE HINGE-MODEL B

+ = ADD THE STROKE

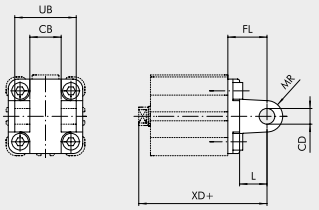

Code	Ø	CB H14	CD H9	FL	L	MR	UB H14	XD	Weight [g]
W0950322003	32	26	10	22	12	10	45	73	112
W0950402003	40	28	12	25	15	12	52	77	159
W0950502003	50	32	12	27	15	12	60	80	250
W0950632003	63	40	16	32	20	16	70	89	390
W0950802003	80	50	16	36	20	16	90	100	668
W0951002003	100	60	20	41	25	20	110	118	1047

Note: Supplied with 4 screws, 4 washers, 2 snap-rings and 1 pin

MALE HINGE-MODEL BA

+ = ADD THE STROKE

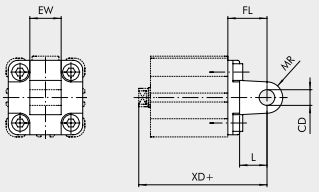

Code	Ø	CD H9	EW	FL	L	MR	XD	Weight [g]
W0950206004	20	8	16	20	12	8	63	44
W0950256004	25	8	16	20	12	8	65	48
W0950322004	32	10	26	22	13	10	73	94
W0950402004	40	12	28	25	16	12	77	124
W0950502004	50	12	32	27	16	12	80	220
W0950632004	63	16	40	32	22	16	89	316
W0950802004	80	16	50	36	22	16	100	578
W0951002004	100	20	60	41	27	20	118	850

Note: Supplied with 4 screws.

FLANGE Ø 20 to 25 - MODEL C (FRONT AND REAR)

+ = ADD THE STROKE

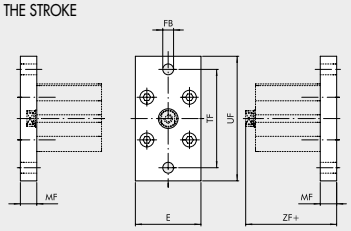

Code	Ø	E	ØFB	MF	TF	UF	ZF	Weight [g]
W0950206002	20	36	6.6	10*	55	70	53*	184
W0950256002	25	40	6.6	10*	60	76	55*	226

Note: Supplied with 4 screws.
* **IMPORTANT:** Non ISO 21287 norm fixing distance

FLANGE Ø 32 to 100 - MODEL C (FRONT AND REAR)

+ = ADD THE STROKE

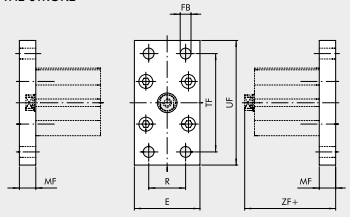

Code	Ø	E	ØFB	MF	R	TF	UF	ZF	Weight [g]
W0950322002	32	50	7	10	32	64	80	61	246
W0950402002	40	55	9	10	36	72	90	62	290
W0950502002	50	65	9	12	45	90	110	65	522
W0950632002	63	75	9	12	50	100	120	69	670
W0950802002	80	95	12	15	63	126	150	80	1420
W0951002002	100	115	14	15	75	150	178	93	2040

Note: Supplied with 4 screws.

RIEGLER & Co. KG
Schützenstraße 27
72574 Bad Urach
Tel. +49 7125 9497-642
technik@riegler.de

Subject to technical changes and errors reserved.
The proficiency testing is the responsibility of the user.
16.10.2026 The specified data do not represent legally guaranteed properties.

ARTICULATED MALE HINGE - MODEL BAS

+ = ADD THE STROKE

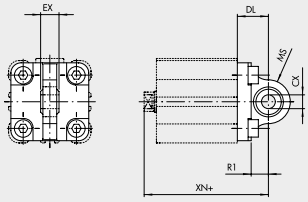

Code	Ø	CX H9	DL	EX	MS	R1	XN	Weight [g]
W0950322006	32	10	22	14	16	12	73	106
W0950402006	40	12	25	16	18	15	77	142
W0950502006	50	12	27	16	21	19	80	236
W0950632006	63	16	32	21	23	20	89	336
W0950802006	80	16	36	21	28	24	100	572
W0951002006	100	20	41	25	30	25	118	840

Note: Supplied with 4 screws, 4 washers

FLANGE FOR OPPOSITE CYLINDERS

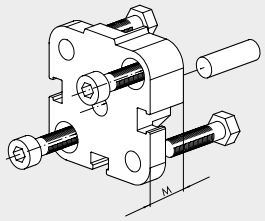

Code	Ø	M	Weight [g]
0950203060	20	12.5	45
0950253060	25	13	57
0950323060	32	14.5	88
0950403061	40	14.5	106
0950503061	50	14.5	158
0950633061	63	14.5	258
0950803061	80	16.5	452
0951003061	100	19.5	801

Note: Supplied complete with 1 pin, 4 screws

ASSEMBLING OPPOSING CYLINDERS

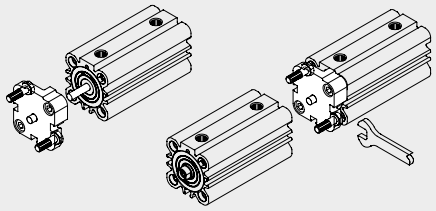

FORK - MODEL GK-M

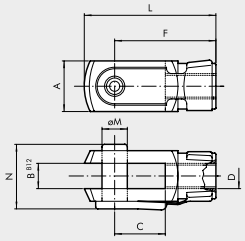

Code	Ø	A	B	C	D	F	L	øM	N	Weight [g]
W0950200020	20	16	8	16	M8	32	42	8	22	48
W0950200020	25	16	8	16	M8	32	42	8	22	48
W0950322020	32	20	10	20	M10x1.25	40	52	10	26	92
W0950322020	40	20	10	20	M10x1.25	40	52	10	26	92
W0950402020	50	24	12	24	M12x1.25	48	62	12	32	148
W0950402020	63	24	12	24	M12x1.25	48	62	12	32	148
W0950502020	80	32	16	32	M16x1.5	64	83	16	40	340
W0950502020	100	32	16	32	M16x1.5	64	83	16	40	340

Note: Individually packed

ROD EYE - MODEL GA-M

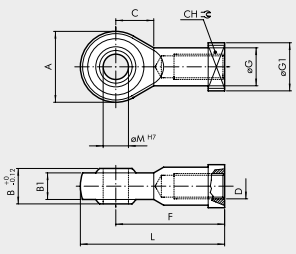

Code	Ø	A	B	B1	C	CH	D	F	øG	øG1	L	øM	Weight [g]
W0950200025	20	24	12	9	13	14	M8	36	12.5	16	48	8	45
W0950200025	25	24	12	9	13	14	M8	36	12.5	16	48	8	45
W0950322025	32	28	14	10.5	15	17	M10x1.25	43	15	19	57	10	70
W0950322025	40	28	14	10.5	15	17	M10x1.25	43	15	19	57	10	70
W0950402025	50	32	16	12	17	19	M12x1.25	50	17.5	22	66.5	12	108
W0950402025	63	32	16	12	17	19	M12x1.25	50	17.5	22	66.5	12	108
W0950502025	80	42	21	15	22	22	M16x1.5	64	22	27	85	16	216
W0950502025	100	42	21	15	22	22	M16x1.5	64	22	27	85	16	216

Note: Individually packed

RIEGLER & Co. KG
Schützenstraße 27
72574 Bad Urach
Tel. +49 7125 9497-642
technik@riegler.de

Subject to technical changes and errors reserved.
The proficiency testing is the responsibility of the user.
16.10.2026 The specified data do not represent legally guaranteed properties.

COMPENSATION JOINT - MODEL GA

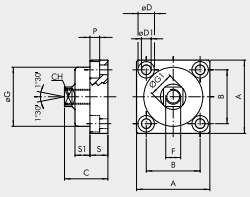

Code	Ø	A	B	C	CH	øD	øD1	F	øG	ØG1	P	S	S1	Weight [g]
W0950326021	32	49	36	30	13	11	6.5	M10x1.25	39.5	17	6.5	12	10	172
W0950326021	40	49	36	30	13	11	6.5	M10x1.25	39.5	17	6.5	12	10	172
W0950406021	50	59	42	36	15	14	8.5	M12x1.25	44	19	8.5	15	13.5	286
W0950406021	63	59	42	36	15	14	8.5	M12x1.25	44	19	8.5	15	13.5	286
W0950506021	80	79	58	44	22	17	10.5	M16x1.5	59	26	10.5	20	15	628
W0950506021	100	79	58	44	22	17	10.5	M16x1.5	59	26	10.5	20	15	628

Note: Individually packed

COUNTER-HINGE CETOP Ø 32 to 100

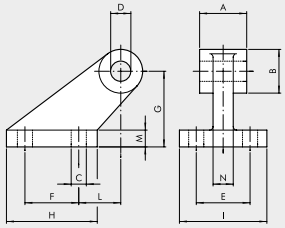

Code	Ø	A	B	C	D	E	F	G	H	I	L	M	N	Weight [g]
W0950322008	32	26	19	7	10	25	20	32	37	41	18	8	10	96
W0950402008	40	28	26	9	12	32	32	45	54	52	25	10	12	216
W0950502008	50	32	26	9	12	32	32	45	54	52	25	10	12	212
W0950632008	63	40	33	11	16	40	50	63	75	63	32	12	15	440
W0950802008	80	50	33	11	16	40	50	63	75	63	32	12	15	464
W0951002008	100	60	44	14	20	50	70	90	103	80	40	16	22	985

Note: Supplied complete with 4 screws, 4 washers

COUNTER-HINGE Ø 16 to 25 - MODEL BC

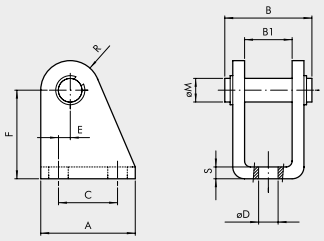

Code	Ø	A	B	B1	C	øD	E	F	øM	R	S	Weight [g]
W0950200005	20	32	30	16	20	6.5	4	30	8	10	4	78
W0950200005	25	32	30	16	20	6.5	4	30	8	10	4	78

Note: Supplied complete with 1 pin and and 2 snap rings

SELF ALIGNING ROD COUPLER - MODEL GA-K

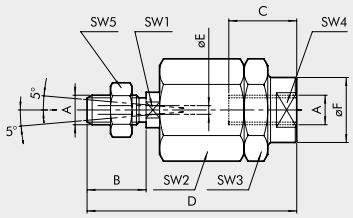

Code	Ø	A	B	C	D	øE	øF	SW1	SW2	SW3	SW4	SW5	Weight [g]
W0950200030	20	M8	20	20	57	4	12.5	7	17	17	11	13	56
W0950200030	25	M8	20	20	57	4	12.5	7	17	17	11	13	56
W0950322030	32	M10x1.25	20	20	71	4	22	12	30	30	19	17	216
W0950322030	40	M10x1.25	20	20	71	4	22	12	30	30	19	17	216
W0950402030	50	M12x1.25	24	20	75	4	22	12	30	30	19	19	220
W0950402030	63	M12x1.25	24	20	75	4	22	12	30	30	19	19	220
W0950502030	80	M16x1.5	32	32	103	4	32	20	41	41	30	24	620
W0950502030	100	M16x1.5	32	32	103	4	32	20	41	41	30	24	620

Note: Individually packed

RETRACTABLE SENSOR

For codes and technical data, see **chapter A6**.

SENSOR, SQUARE TYPE
Latest generation,
secure fixing

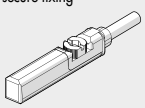

SENSOR, OVAL TYPE
Traditional

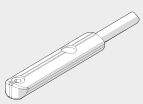

RIEGLER & Co. KG
Schützenstraße 27
72574 Bad Urach
Tel. +49 7125 9497-642
technik@riegler.de

Subject to technical changes and errors reserved.
The proficiency testing is the responsibility of the user.
16.10.2026 The specified data do not represent legally guaranteed properties.

POSITION SENSORS

LTS

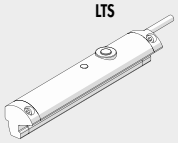

For technical data and usage strokes see **chapter A6**.

SPARE PARTS FOR ISO 21287 CYLINDER

COMPACT CYLINDERS ISO 21287 (POLYURETHANE)

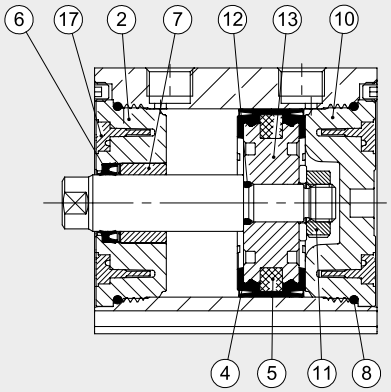

Code	Bores	Type	Parts
009 . . . L001	Ø 20, 25	Complete set of gaskets polyurethane	④⑥⑧
009 . . . L001	Ø 32 to 63	Complete set of gaskets polyurethane	④⑥⑧⑫⑰
009 . . . L001	Ø 80, 100	Complete set of gaskets polyurethane	④⑥⑧⑫
009 . . . L008	Ø 20, 25	Complete set of (high temperature) FKM/FPM gaskets	④⑥⑧
009 . . . L008	Ø 32 to 63	Complete set of (high temperature) FKM/FPM gaskets	④⑥⑧⑫⑰
009 . . . L008	Ø 80, 100	Complete set of (high temperature) FKM/FPM gaskets	④⑥⑧⑫
009 . . . 7013	Ø 20 to 100	Polyurethane piston rod gasket kit	⑥
009 . . . 7014	Ø 20 to 100	FKM/FPM piston rod gasket kit	⑥
009 . . . L101	Ø 20, 25, 80, 100	Front head kit	②⑥⑦⑧
009 . . . L101	Ø 32 to 63	Front head kit	②⑥⑦⑧⑰
009 . . . L201	Ø 20, 25, 80, 100	Rear head kit	⑧⑩
009 . . . L201	Ø 32 to 63	Rear head kit	⑧⑩⑰
009 . . . 7401	Ø 20, 25	Piston kit polyurethane	④⑤⑪
009 . . . L401	Ø 32 to 63	Piston kit polyurethane	④⑤⑪⑫⑬⑰
009 . . . 7401	Ø 80 to 100	Piston kit polyurethane	④⑤⑪⑫⑬

RIEGLER & Co. KG
Schützenstraße 27
72574 Bad Urach
Tel. +49 7125 9497-642
technik@riegler.de

Subject to technical changes and errors reserved.
The proficiency testing is the responsibility of the user.
16.10.2026 The specified data do not represent legally guaranteed properties.

Accessories

	Art. No.	Type No.
Foot fastening, ISO 15552, for compact cylinder, Standard cylinder, Piston Ø 32, 1 piece with 2 screws	106125	437.14-M
Counter bearing CETOP, for ISO 15552 and ISO 21287, Ø32, with 4 screws	106137	437.23-M
Front or floor flange, ISO 15552, ISO 21287, Piston Ø 32, with 4 screws	106159	437.04-M
Threaded plate for the T-nut, for compact cylinder, Standard cylinder, Threaded plate M4	106168	235.11-M
Threaded plate for the T-nut, for compact cylinder, Standard cylinder, Threaded plate M3	106169	235.12-M
Threaded plate for the T-nut, for compact cylinder, Standard cylinder, Threaded plate M3/ M4	125522	235.05-M
Female hinge model, ISO 15552, ISO 21287, Ø32, 4 screws, 1 bolt and retainer ring	156658	453.001
Female hinge model with bushes, ISO 15552, ISO 21287, Ø32, 4 screws, 1 bolt and retainer	156669	453.012
Female hinge model for articulated male hinge model, ISO 15552, ISO 21287, Ø32, 4 screws, 1 bolt and retainer	156680	453.023
Male hinge model, ISO 15552, ISO 21287, Ø32, with 4 screws	156701	453.044
Male hinge model with bushes, ISO 15552, ISO 21287, Ø32, with 4 screws	156712	453.055
Counter-hinge model CETOP RP107P, for ISO 15552 and ISO 21287, Ø32, without screws	156723	453.066
Articulated male hinge model, ISO 15552, ISO 21287, Ø32, with 4 screws	156743	453.086
Angle flange, ISO 15552, ISO 21287, Ø32, 1 piece with 4 screws	156754	453.097
REED sensor for the T-slots and rectangular slots, for all cylinders except short stroke cylinders, 2-wire, with 2.5 m cable, LED	194356	235.03-M-1
REED sensor for the T-slots and rectangular slots, for all cylinders except short stroke cylinders, 2-wire, M8(3-pole), LED, 300mm	194357	235.04-M-1
HALL sensor for the T-slots and rectangular slots, for all cylinders except short stroke cylinders, 3-wire, 2.5 m cable, PNP, LED	194358	235.06-M-1
HALL sensor for the T-slots and rectangular slots, for all cylinders except short stroke cylinders,3wire, M8(3-pole),PNP,LED,300mm	194359	235.07-M-1
Counter-hinge model CETOP RP107P, ISO 6432 Ø25, round cyl. Ø32,ISO21287 Ø32-40,ISO15552 Ø32, f.fork model DIN71752, without screws	156733	453.076

Spareparts

	Art. No.	Type No.
Seal set (wear part), for compact cylinder, Piston Ø 32, PU seal	106172	235.17-M

Subject to technical changes and errors reserved.
The proficiency testing is the responsibility of the user.
16.10.2026 The specified data do not represent legally guaranteed properties.